Automatic Door Controller Manual

ORD-500Pro Version: 2.0

zhouaihong@oredy.cn

Suzhou Oredy Intelligent Door Control Co., Ltd.

Contents

1.Controller Port Description

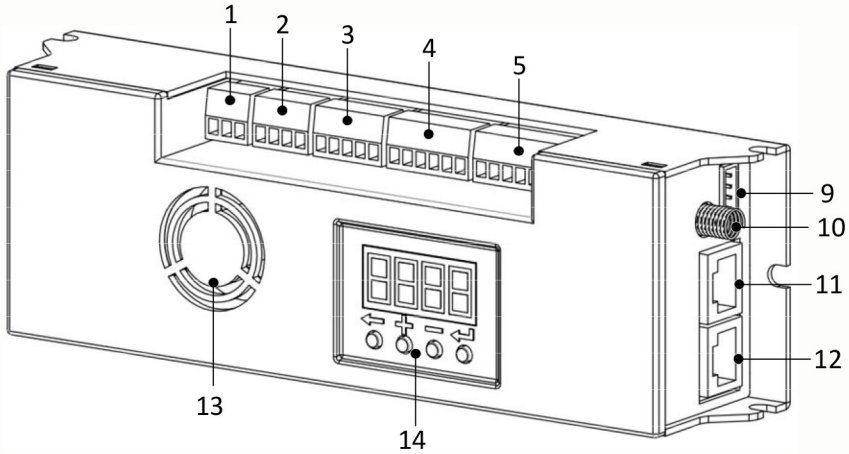

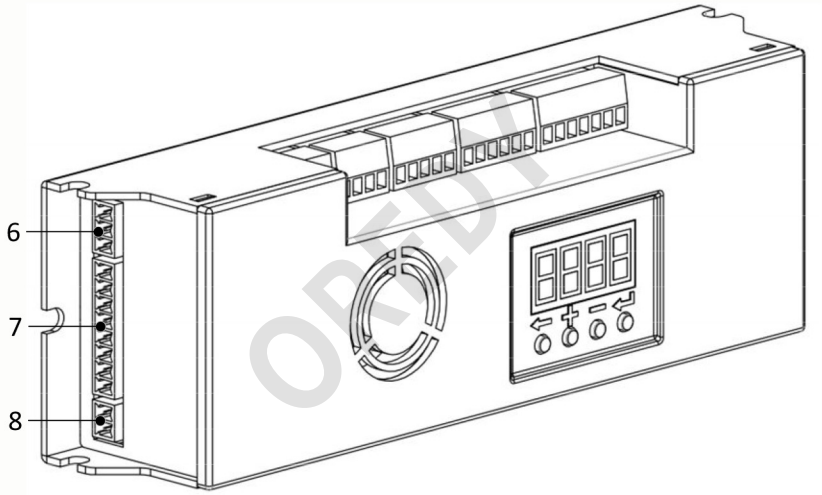

Serial Number	Illustrate	Serial Number	Illustrate
1	Interlock port	8	Electric lock
2	Access control port	9	Software Update Port
3	Internal & external sensor ports	10	Remote control receiving antenna
4	Anti-collision protection port	11	C2 Communication Port
5	Multi-function input port	12	C1 Communication Port
6	Power port	13	Intelligent temperature control fan
7	M1:Motor port	14	Debug interface

2.Controller Specifications

Input Power	26V DC , 180W	
Standby Power	8W	
Output Power	Max. 250W	
Passive Contacts	(250VAC, 30VDC) Max , 10A	
Input Contact	NPN Or Passive input (such as relay)	
Travel Range	<5000mm	
Usage Environment	-20-60℃	85%RH No condensation

3.Function Introduction

● Internally integrated S-curve smooth operation;

● Internally integrated high-frequency 433Mhz receiving module, using CPU soft decoding, can support 6 mode switching + 2 operation remote control passive output, can control external devices by remote control;

● Internally integrated communication module, can be connected to external Bluetooth/IFI module, with remote control/parameter debugging/data upload/fault diagnosis and other IoT functions

● Equipped with silent cooling fan, can intelligently turn on/off the fan through temperature (settable) identification;

● Programmable input function, different functions of the terminal can be set through the debugging interface;

● Support backup battery, internal integrated charge and discharge management unit, door body reaction after power outage can be set;

● Support obstacle point memory, slow down in advance near the obstacle point to avoid possible secondary collision,

4.Port Description

Port	Shape	Port Number	Direction
⑥	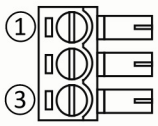	①	Main power input +
		②	Main power/backup power input-
		③	Backup power input +
⑧	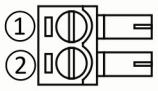	①	Electric lock (brake) +
		②	Output 0 (default EL, F8.16 adjustable)
①	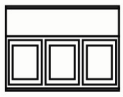	1	Default interlock input, F8.00 adjustable
		2	Default interlock output, F8.17 adjustable
		3	COM
②	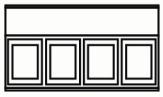	4	+12V
		5	GND
		6	Access control input, F8.01 adjustable
		7	COM
③	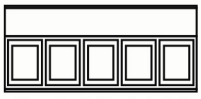	8	+24V
		9	GND
		10	Outdoor sensor, F8.02 adjustable
		11	Indoor sensor, F8.03 adjustable
		12	COM
④	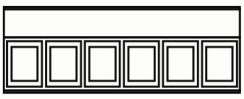	13	+24V
		14	+12V

		15	GND
		16	Close door beam signal, F8.04 adjustable
		17	Open door beam signal, F8.05 adjustable
		18	COM
⑤	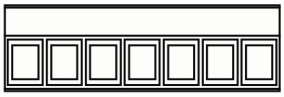	19	Default fire input, F8.06 adjustable
		20	Emergency stop input, F8.07 adjustable
		21	Default ratchet input, F8.08 adjustable
		22	Default restart input, F8.09 adjustable
		23	COM
		24	Relay output
		25	Relay output
M1	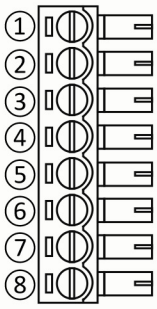	①	Brushed DC Motor+
		②	Brushed DC Motor-
		③	
		④	+5V
		⑤	GND
		⑥	Brushed DC Motor A
		⑦	Brushed DC Motor A
		⑧	

5. Wiring and Debugging

5.1 Wiring

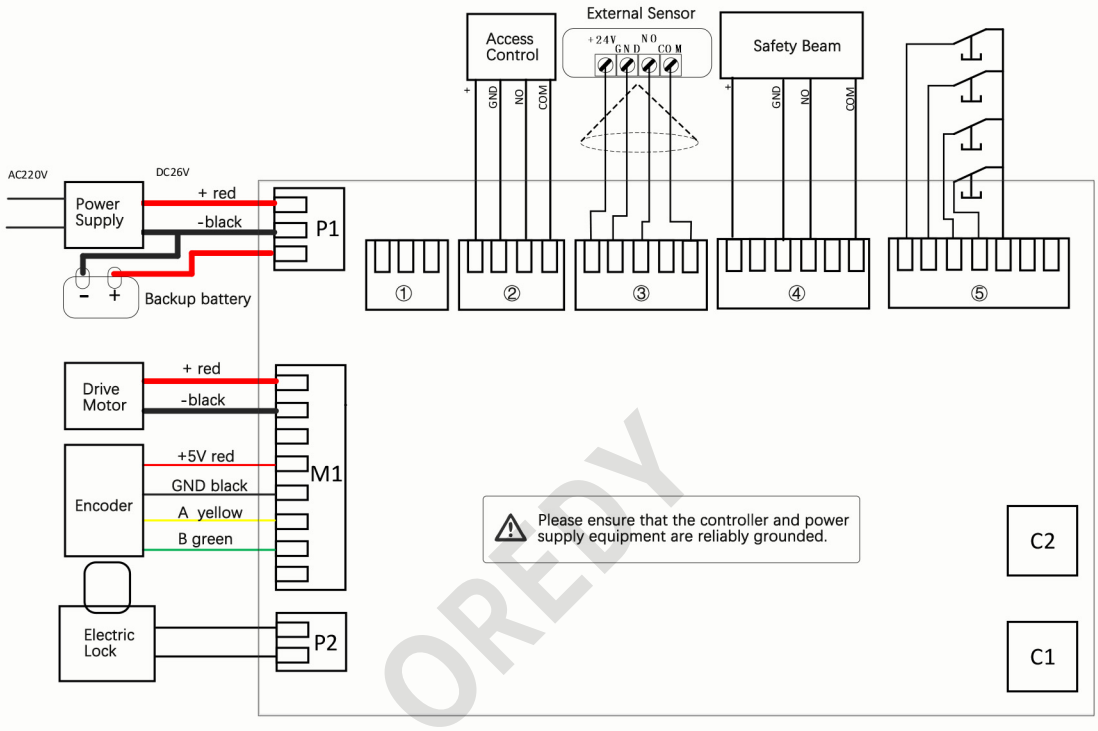

5.2 Debug Interface

5.2.1 Debug interface composition

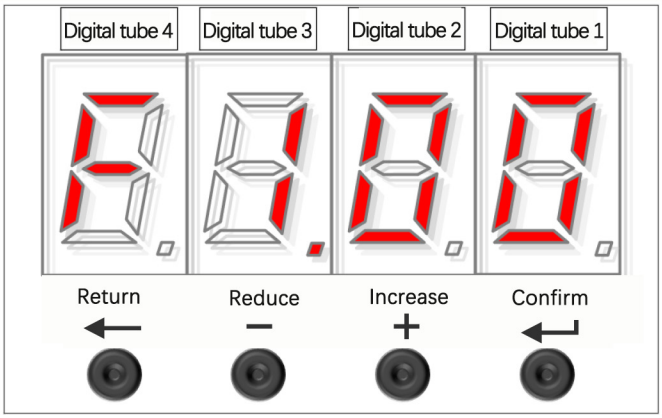

5.2.2 Basic operations of the debugging interface

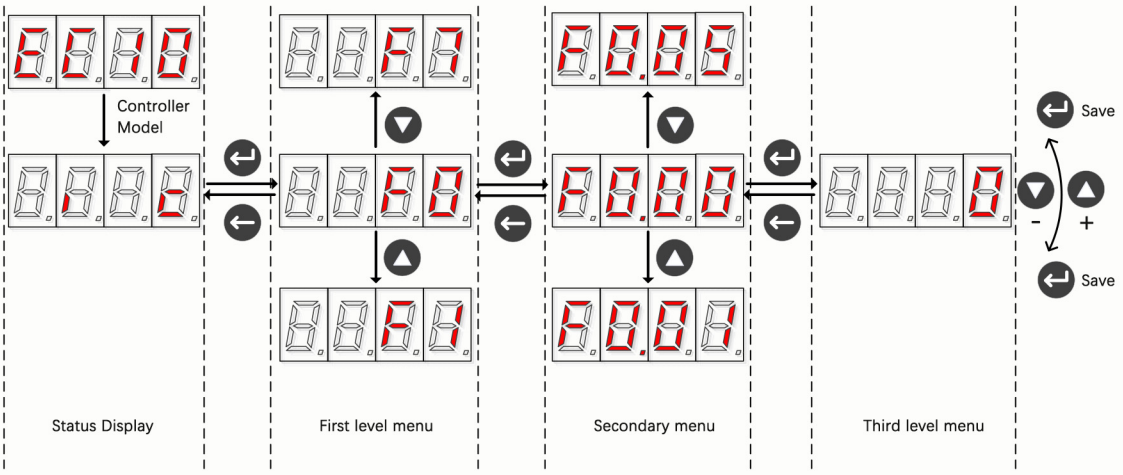

Note: When the key operation is valid, the buzzer will emit a "beep" sound, and when the key operation is invalid, the buzzer will emit two "beep, beep" sounds.

5.2.3 Controller restart

When some parameters of the controller need to be restarted to take effect or other reasons require restarting, you can restart through the operation interface. The steps are as follows

- The controller is in the activated state (see 5.2.4);
- Long press ← Until the controller displays 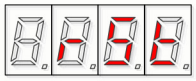 (abbreviation for reset) and then release
- The controller has completed restarting

5.2.4 Display unit activation and sleep

To reduce the standby power consumption and possible light interference of the controller, when the controller has no key operation for a long time exceeding F3.18 the set time,The display unit digital tube will remain off and enter sleep mode, but other functions will work normally.

When the F3.18 value is set to 0, the controller will cancel entering sleep mode and remain active.

When the controller enters the dormant state, short pressing any button can trigger the display unit to enter the active state.

When the controller enters the dormant state, when the controller fails or other conditions occur, the display unit automatically enters the active state

5.2.5 Status display interface

The status display interface can quickly understand the operating status of the controller, and perform troubleshooting, input and output troubleshooting, power supply troubleshooting, etc. When the controller is powered on or restarted (the controller model is displayed first), it automatically enters the status display interface. You can also enter the status display interface by (refer to 5.2.2).

A single digital tube has 8 display segments, as follows:

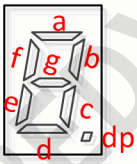

The meaning of each digital tube display segment on the status display interface is as follows:

Digital tube segment	Digital tube 4	Digital tube 3	Digital tube 2	Digital tube 1
a	Interlock input valid	Emergency stop input valid		Opening : o Closing : c Opening completed: O Closing completed: C Stopped: S
b	Access control input valid	Ratchet input valid	Motor or encoder failure	
c	Outdoor sensor input valid	Lock output valid	--	
d	Indoor sensor input valid	Interlock output valid	Learning Failure	

e	Close door beam signal valid	Unlock output valid	System failure	
f	Open door beam signal valid	Fan output valid	--	
g	--	--	Communication interface accepts	
dp	--	Electric lock output valid	Backup battery power supply	Obstruction of opening and closing door

5.3 Remote Control

5.3.1 Button Functions

The remote control transmission frequency is 433 MHz, and the remote control receiving decoding method is CPU soft decoding, so it supports up to 8 types of operation recognition. The functions of each button operation are as follows

Button	Short Press	Long Press
A	Open	Normally Open
B	Automatic	Half Open
C	One Way	Stop
D	Lock	Relay Output

Note: Press and hold the A+D buttons simultaneously to restart the controller. Please do not operate when the door is moving!

● Short press: Press the button for less than 1 second, and it will take effect after releasing it. The controller buzzer will emit a short beep to remind you.

● Long press: Press the button for 1 second, and it will take effect after releasing it. The controller buzzer will emit a long beep to remind you.

● Half open: The door is not fully opened, and the opening range can be set by F5.04.

● Relay output: The default contact is disconnected when powered on, closed after long pressing, disconnected after long pressing again, and so on.

5.3.2 Remote Control Learning

The remote control needs to be paired and learned before it can be operated accordingly. The learning process is to store the address code of the remote control (each remote control has a unique ID) into the controller EEPROM storage module. The controller supports up to 5 groups of remote control storage, and one group is stored each time. If the number exceeds the limit, the address code of the remote control learned earlier will be overwritten and invalidated. The learning process is as follows:

1. Set F0.05 to 1, press ↵ to save, and the buzzer will sound a long beep (if the learning is not completed within 10 seconds, the controller will exit the code learning mode and the buzzer will stop sounding);

2. Short press any button on the remote control that needs to be paired. The buzzer stops beeping and beeps once.

3. The controller automatically exits the code learning mode. Repeat the above steps to complete the learning and binding of the next remote control.

5.3.3 Remote Control Clear

If you need to clear the address code storage of the remote control, that is, make its recognition invalid, set F0.06 to 1, press ↵ Save, and the controller will clear all the previously learned remote control address codes.

5.4 System functions

5.4.1 Operation mode

The operation mode is divided into user mode and system mode. The current operation mode can be viewed by F0.02 , and the user mode can be viewed and set by F0.02 . The larger the parameter value, the higher the priority.

Category	Parameter Value	Mode	Description	Trigger Condition
User Mode	1	Automatic mode	● Respond to access control/inside/outside door opening signal ● Door closed without locking (brake)	● Remote control settings ● Menu settings ● Programmable switch settings
	2	Normally open mode	● No response to any door opening or closing signal. ● The door remains open.	
	3	Lock mode	● No response to any door opening and closing signal. ● The door remains closed. ● Locks (brake) after closing.	
	4	Half open mode	● Respond to access control/inside/outside door opening signal ● Door closed without locking (brake) ● Door opening range is 50%	
	5	--	--	
	6	One-way mode	● Respond to access control/indoor sensor door opening signals ● Close the door and lock (brake)	
	7	Stop mode	● Does not respond to any door opening and closing signals ● The door body remains stopped	● Remote control settings ● Menu settings
	8	Demo mode	● Repeatedly open and close the door (suitable for factory aging) ● Lock it after closing (brake)	● Menu settings
	9	Jog mode	● In the status display interface, press the plus key to open the door, press the minus key to close the door, and release to stop. ● Suitable for trial operation during on-site installation	
System Mode	10	learning mode	● Learning required for first installation ● Learning required after replacing the door mechanism	● Menu settings
	11	Force close mode	● Does not respond to any door opening and closing signals ● Does not respond to safety anti-pinch signal ● Door closes slowly	● Slow-off input is valid
	12	fire mode	● Does not respond to any door opening and closing signals ● Does not respond to safety anti-pinch signals ● The door closes slowly	● Fire input valid
	13	emergency stop mode	● Does not respond to any door opening or closing signal. ● The door remains stopped.	● Emergency stop input valid
	14	Failure mode	● Does not respond to any door opening or closing signal. ● The door remains stopped.	● Failure
	15	Restart mode	● No response to any door opening or closing signal ● Controller restart	● Restart input valid

5.4.2 Programmable Input and Output

The input 0-9 interface functions are set by F8.00 - F8.09 (repeatable settings), there are 23 functions in total, the specific parameter values correspond to the following functions:

Parameter value	Name	Remarks
0	No function	No function assigned = Disable this input
1	External door opening signal	
2	Inner door opening signal	
3	Access control signal	
4	Ratchet signal	
5	Unlock fully open	
6	Unlock half open	
7	Forced open	
8	Forced close	
9	Emergency stop	
10	Fire signal	
11	Interlock input	
12	Open protection	
13	Close protection	
14	Automatic mode	
15	Normally open mode	
16	Normal closed (Lock) mode	
17	Half open/push to open mode	
18	One-way mode	
19	Manual mode	
20	Door lock unlock input	
21	Door lock lock input	
22	Restart	

Input 0-7 interface functions are set by F8.15-F8.22 (repeatable setting), there are 19 functions in total, the specific parameter values corresponding to functions are as follows:

Parameter value	Name	Remarks
0	No function	No function assigned = Disable this input
1	Opening completed	
2	Fully opening completed	
3	Half opening completed	
4	Closing completed	
5	Stopped	
6	Interlocked	
7	Moving	
8	Obstructed	
9	Pushed	
10	Fault	
11	Locked or brake signal	
12	No function	No function assigned = Disable this input
13	Buzzer	
14	Fan	
15	Locked or brake output	
16	Unlock signal	
17	Lock signal	
18	Remote control output	

5.4.3 Door opening and closing parameters

Take the door opening parameters as an example, the door closing parameters are the same:

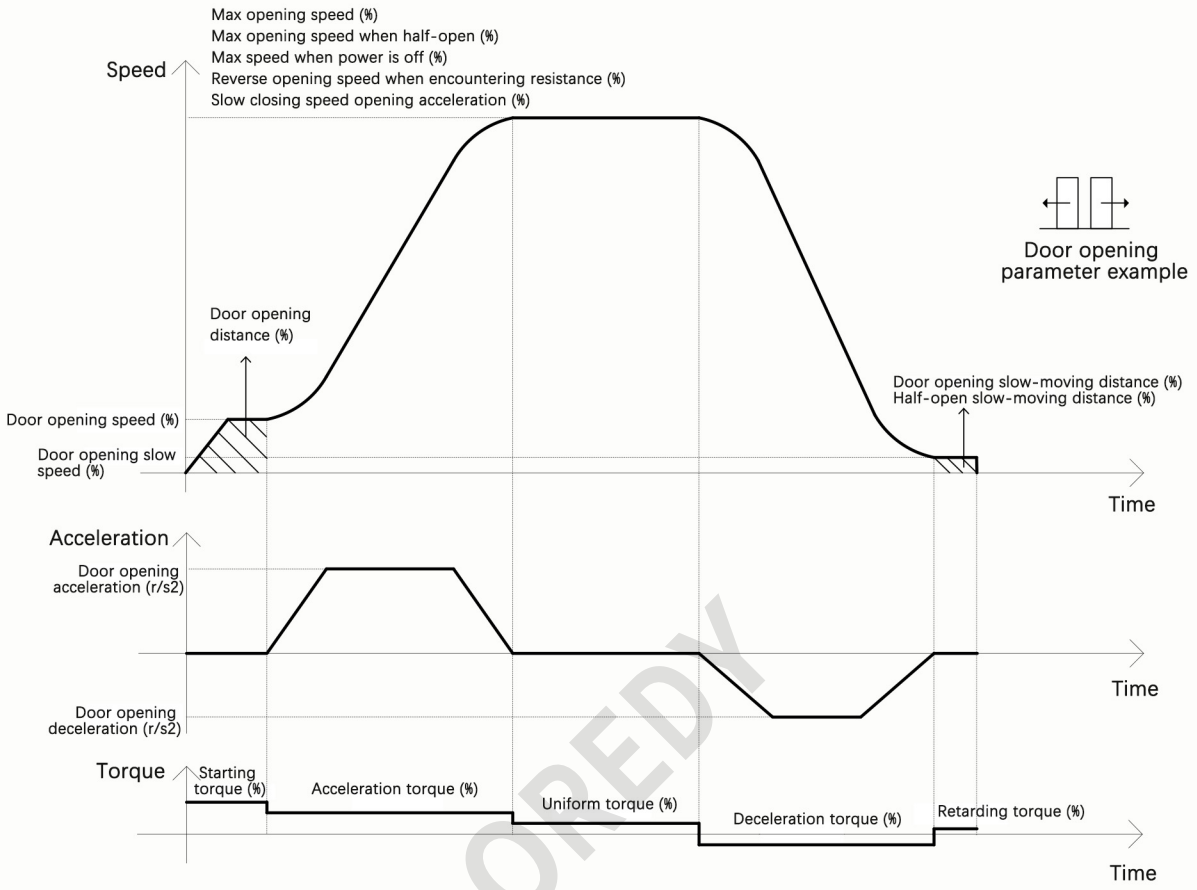

6 Operation

6.1 First Startup

After installation or replacement of the door structure, the following preparations need to be made:

- Disconnect the main power supply. If a backup battery is connected, disconnect the backup battery first;
- Unplug the motor plug and manually check whether the door opens and closes smoothly
- Insert the motor plug, turn on the power, set according to the configuration, and set F0.02 to 9 (jog mode);
- On the status display interface, use ▲ or ▼ to open and close the door. Check whether the door opening status displayed on the status display interface is opposite to the actual one. If it is opposite, adjust F3.05. After the adjustment is saved, it needs to be restarted to take effect.

Set the required operating mode via the remote control.

- Set the required operating mode via the remote control.

Note: 1. Restarting the door collector will slowly open and close the door once to learn the resistance and stroke.

2. To open and close the door repeatedly, set F0.02 to 8, and press ▲ to open and close the door automatically after returning to the main interface.

6.2 Troubleshooting

The classification of fault status can be displayed through the status display interface, and the detailed fault codes of the last five times can be displayed through F2.02- F2.06 .

Classification	Fault code	Fault name	Troubleshooting
Power failure	13	Power supply overvoltage	Check the power input device
	14	Power supply undervoltage	
Motor failure e	1	Motor open circuit	Check the motor connection
	3	Motor short circuit	Check the motor connection
	7	Motor overspeed	Check the encoder
	11	Encoder failure	Check the encoder
Learning failure	9	Learning failed	Check whether the pulley and the transmission structure are slipping
System failur	15	Open/close timeout	Check whether there are obstacles during the door opening and closing process, etc.
	16	Memory failure	Check whether there are obstacles during the door opening and closing process, etc.