Module Light Box

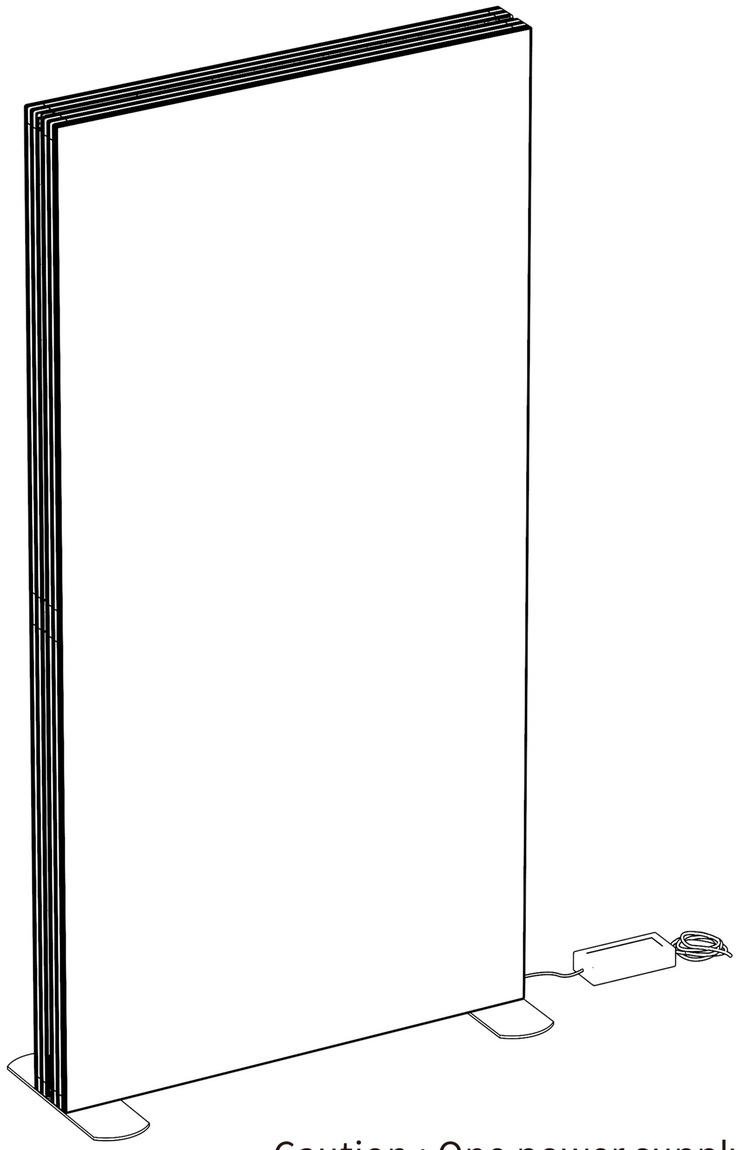

Caution : One power supply
can only drive 3pcs LED light strip most

500/850/1000X1500(1000+500)
500/850/1000X2000(1000+1000)
500/850/1000X2250(1250+1000)
500/850/1000X2500(1250+1250)

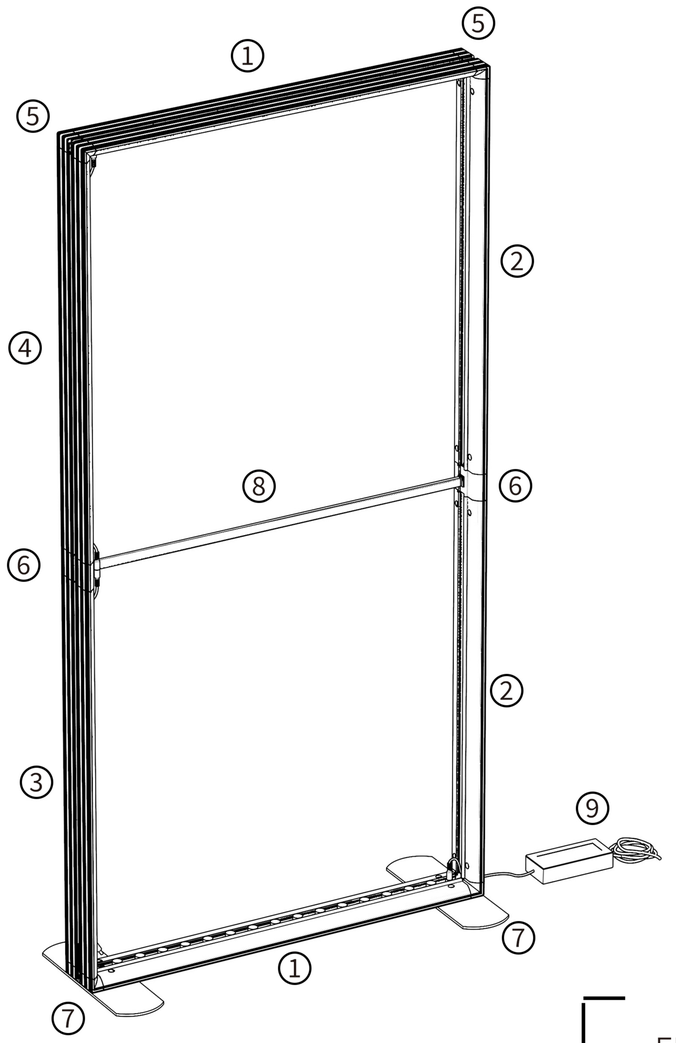

ELECTRIC
CIRCUIT LAYOUT

①

Horizontal Profile x 2

②

Vertical profile x 2

③ 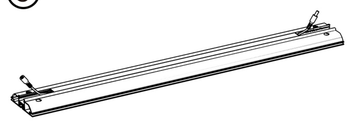

Extrusion for female & male connecting wire x 1

④ 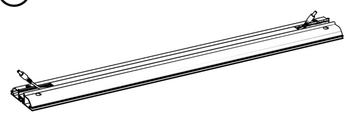

Extrusion for double male connecting wire x 1

⑤

Corner Part x 2

⑥ 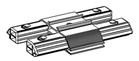

Corner Part x 2

⑦ 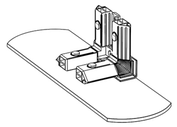

Corner Part x 2

⑧

Support Pole x 1

⑨ 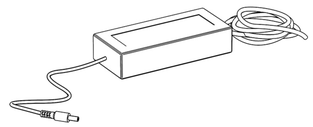

Power supply x 1

Module Light Box

1

2

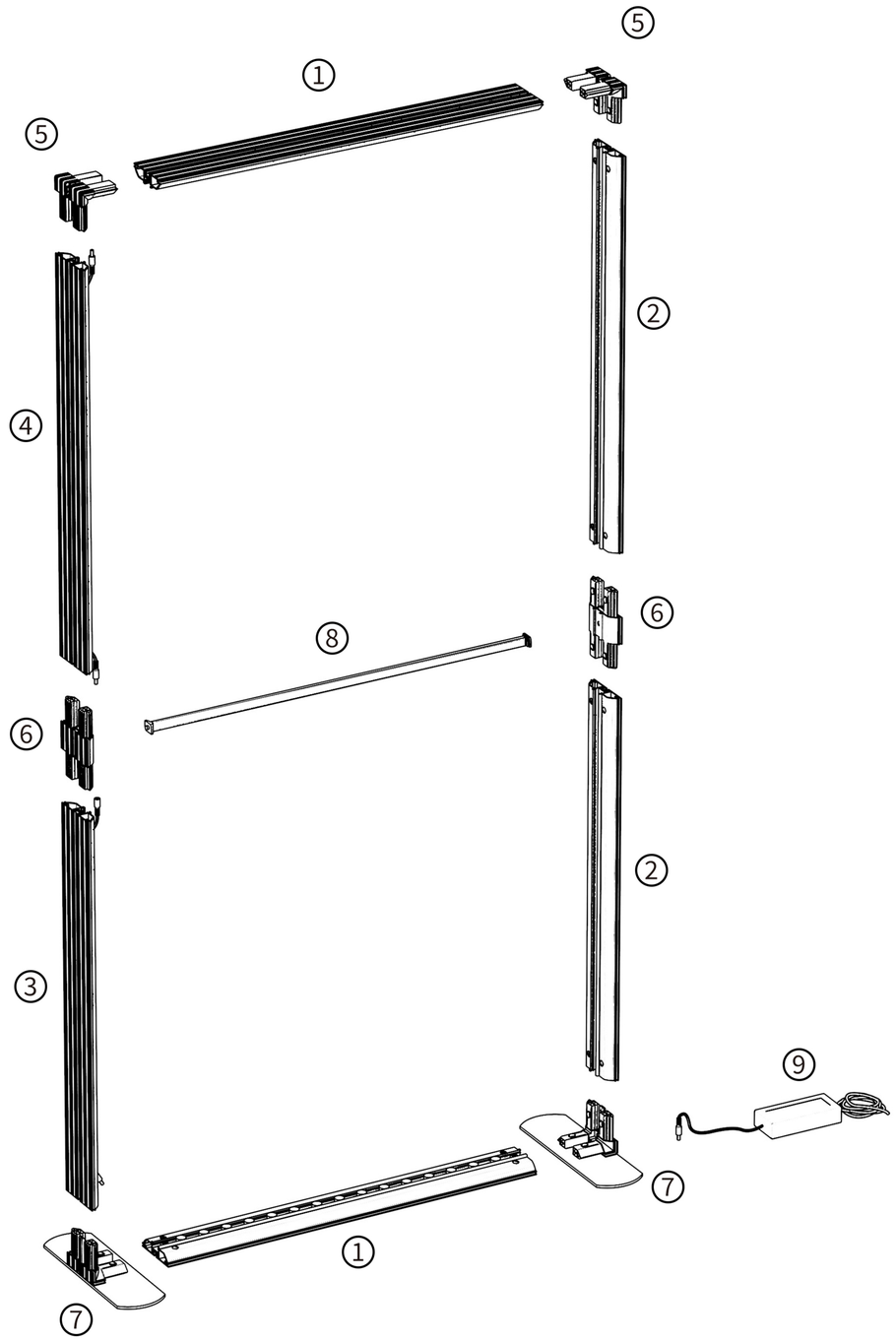

3

1

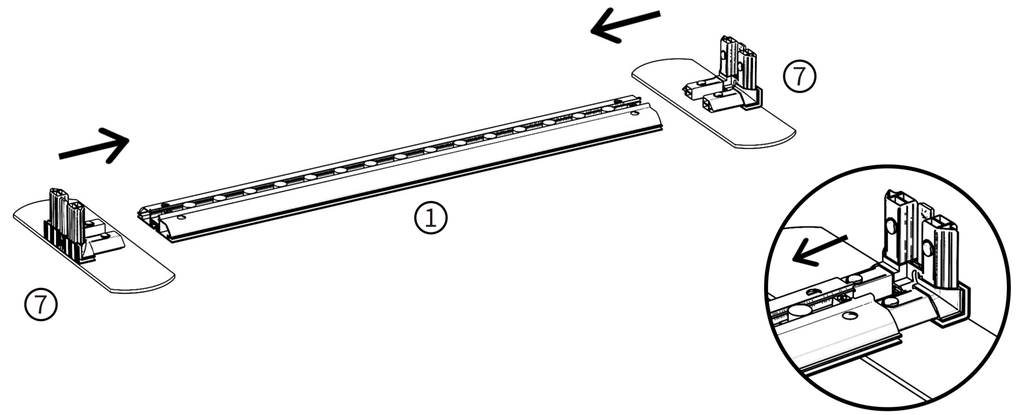

2

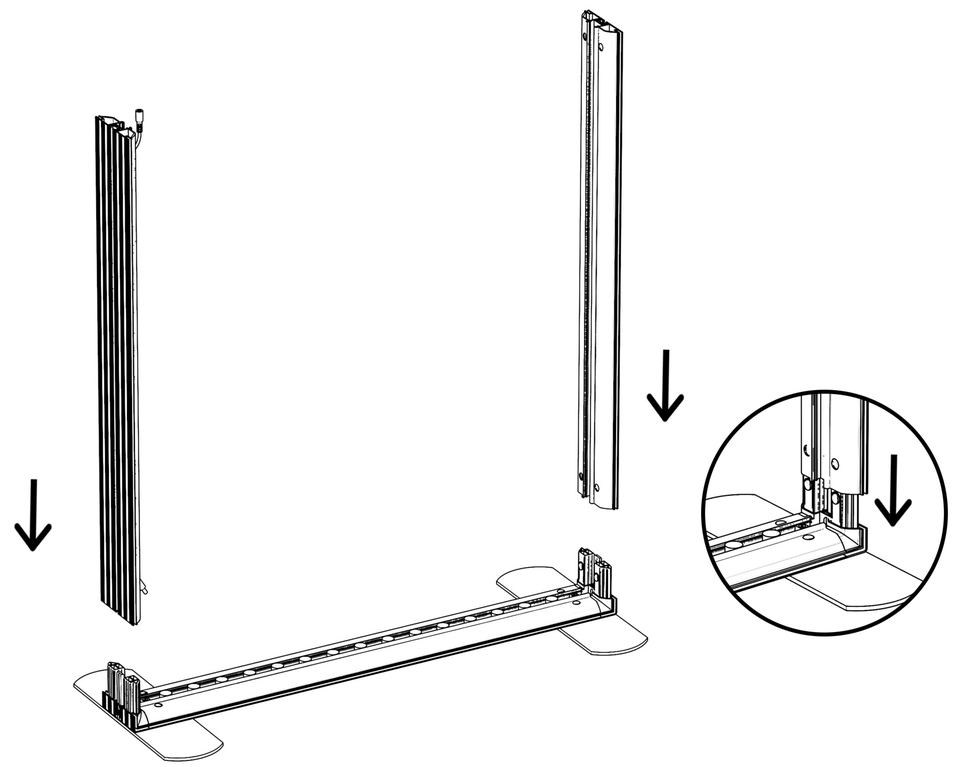

4

3

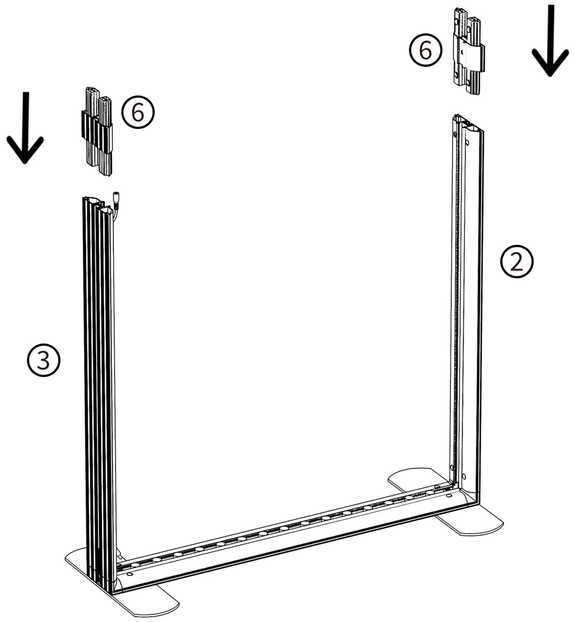

4

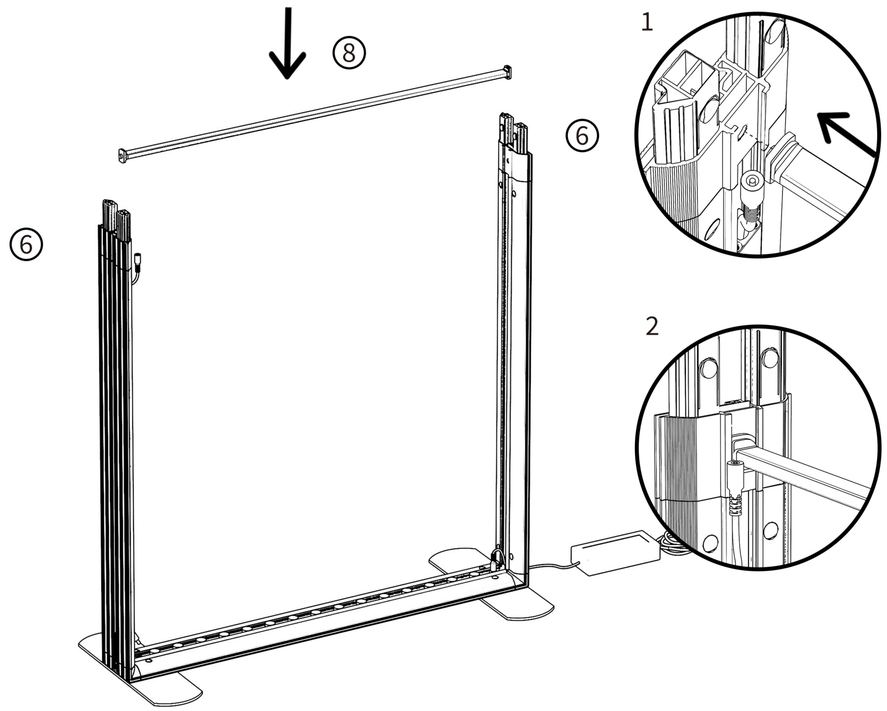

5

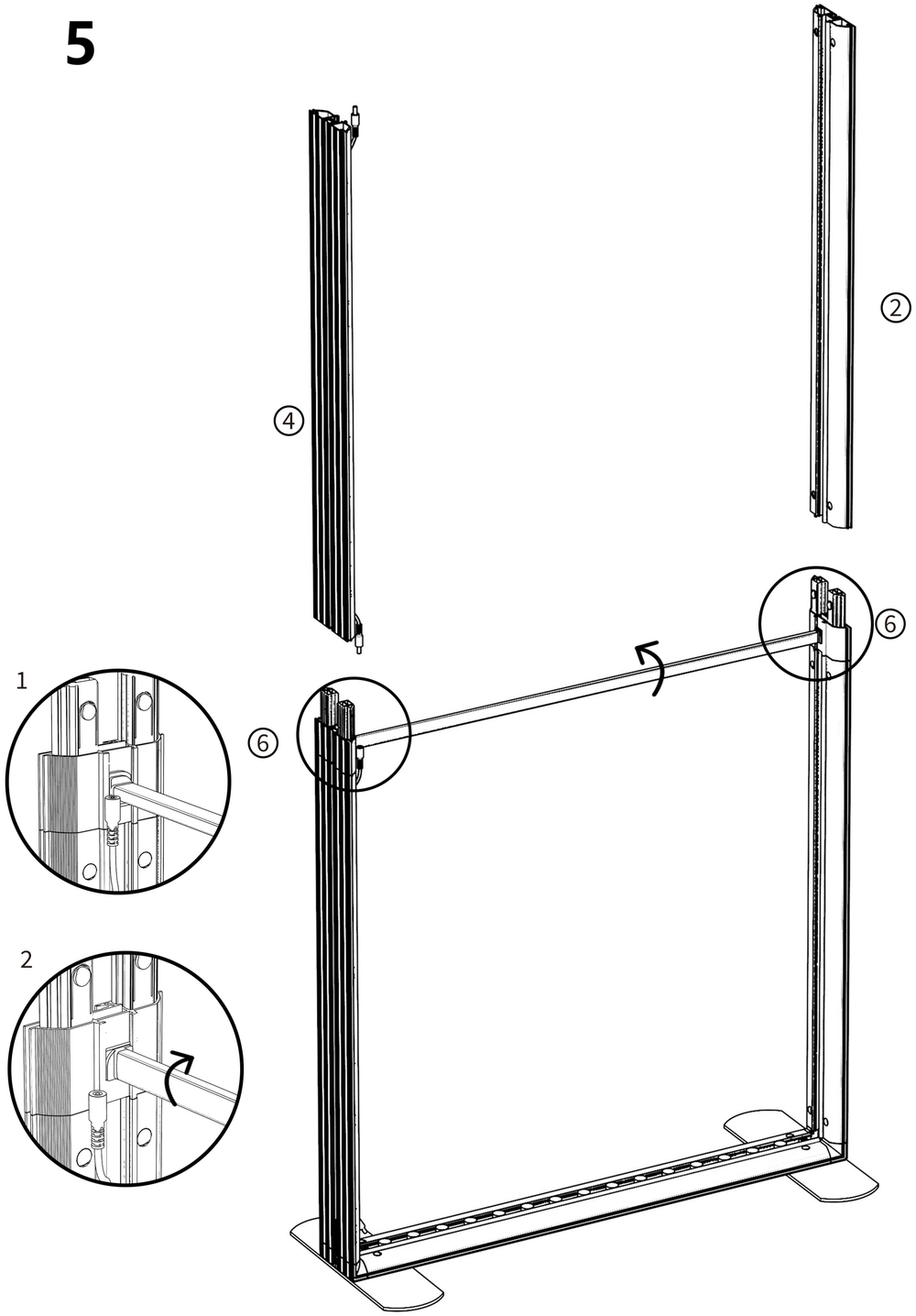

6

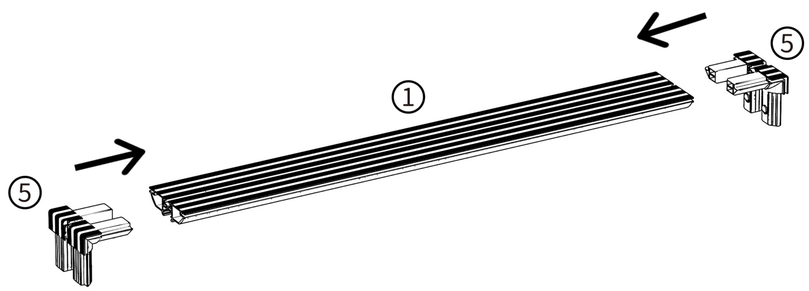

7

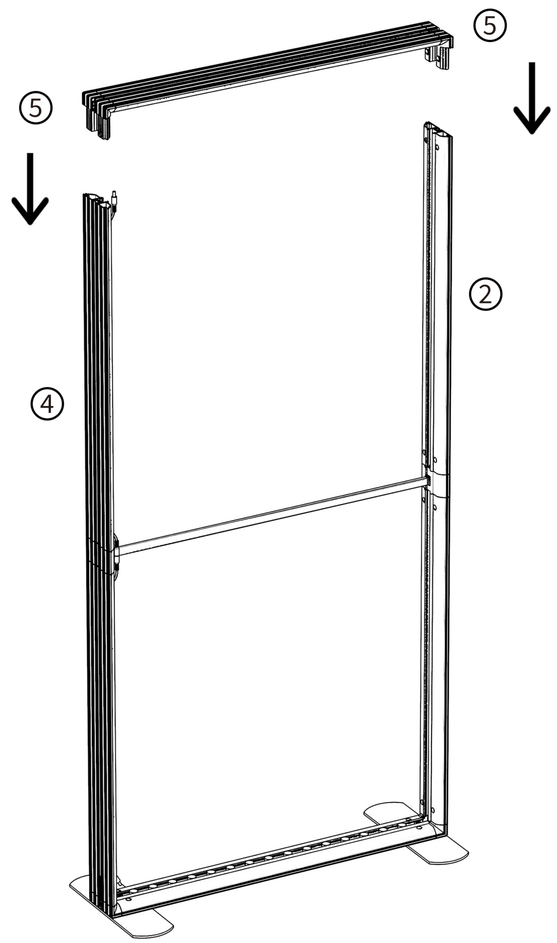

7

8

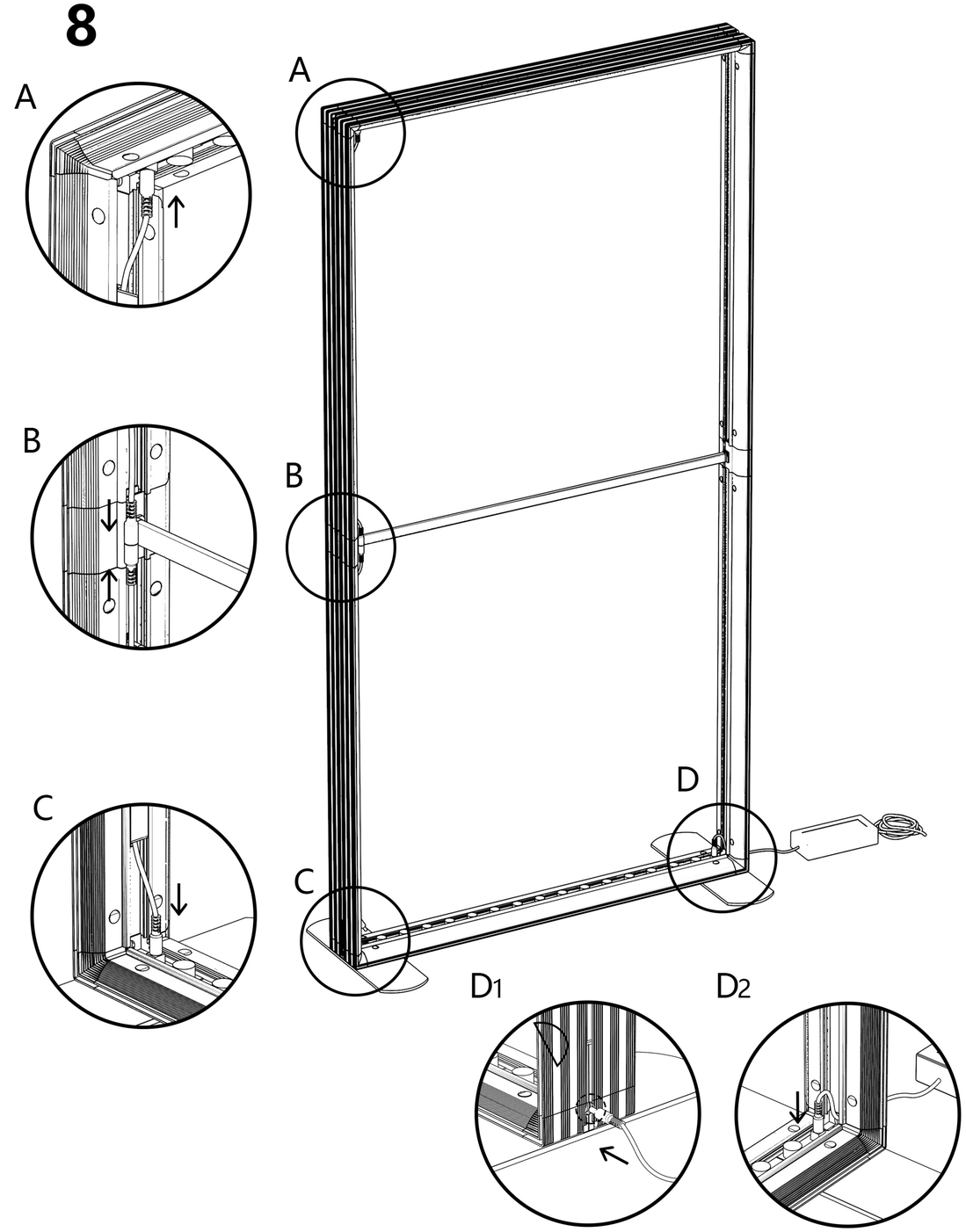

8

500/850/1000X2500(1000+1000+500)

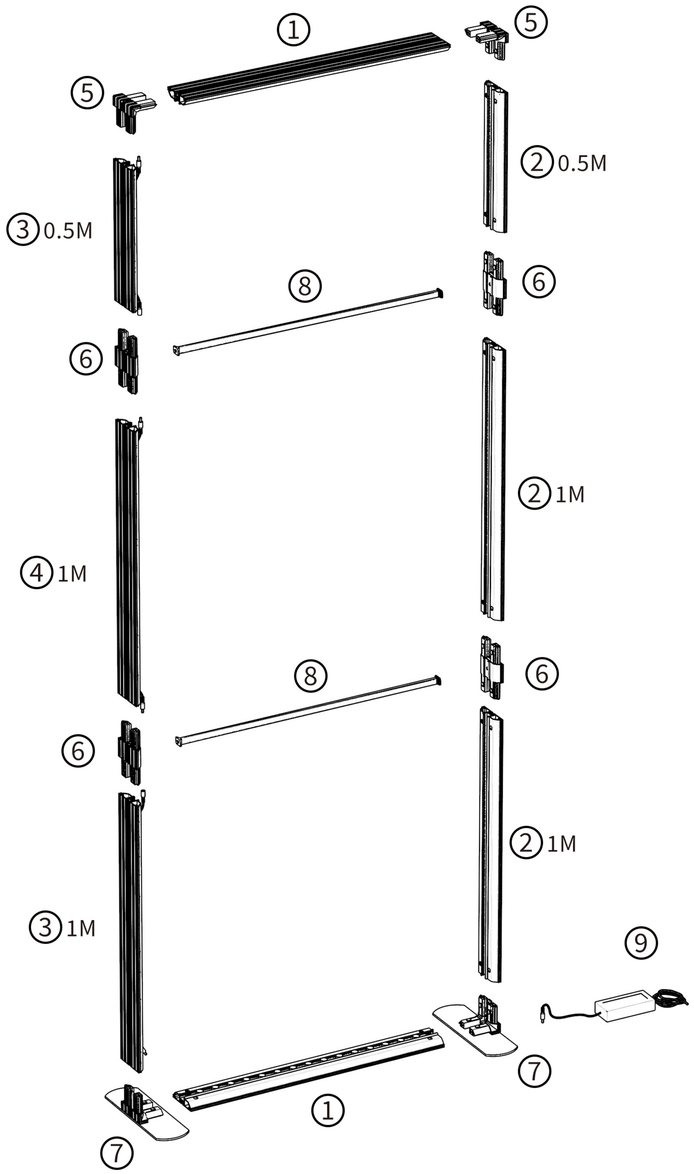

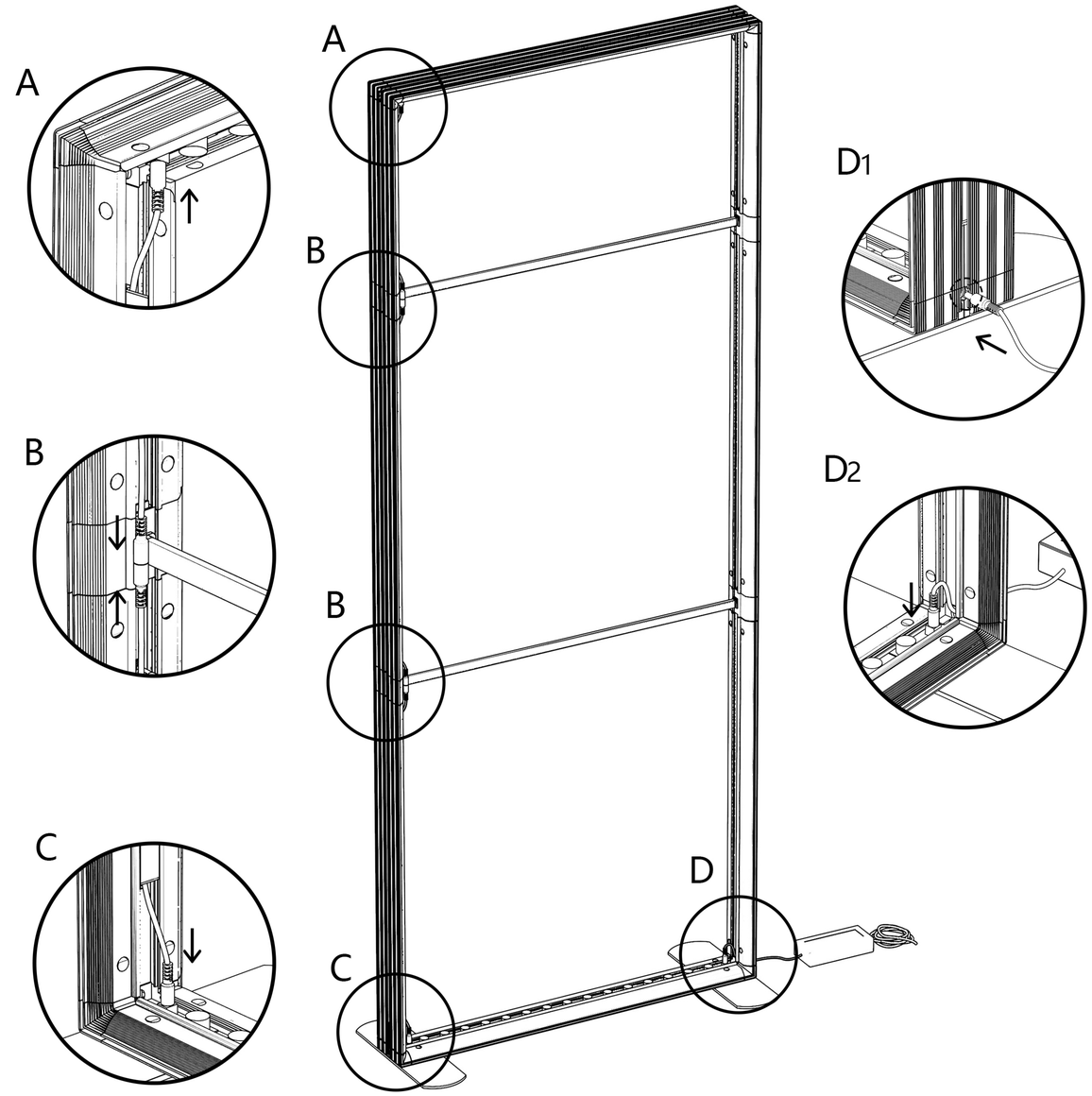

1500/1850/2000X1500(1000+500)
1500/1850/2000X2000(1000+1000)
1500/1850/2000X2250(1250+1000)
1500/1850/2000X2500(1250+1250)

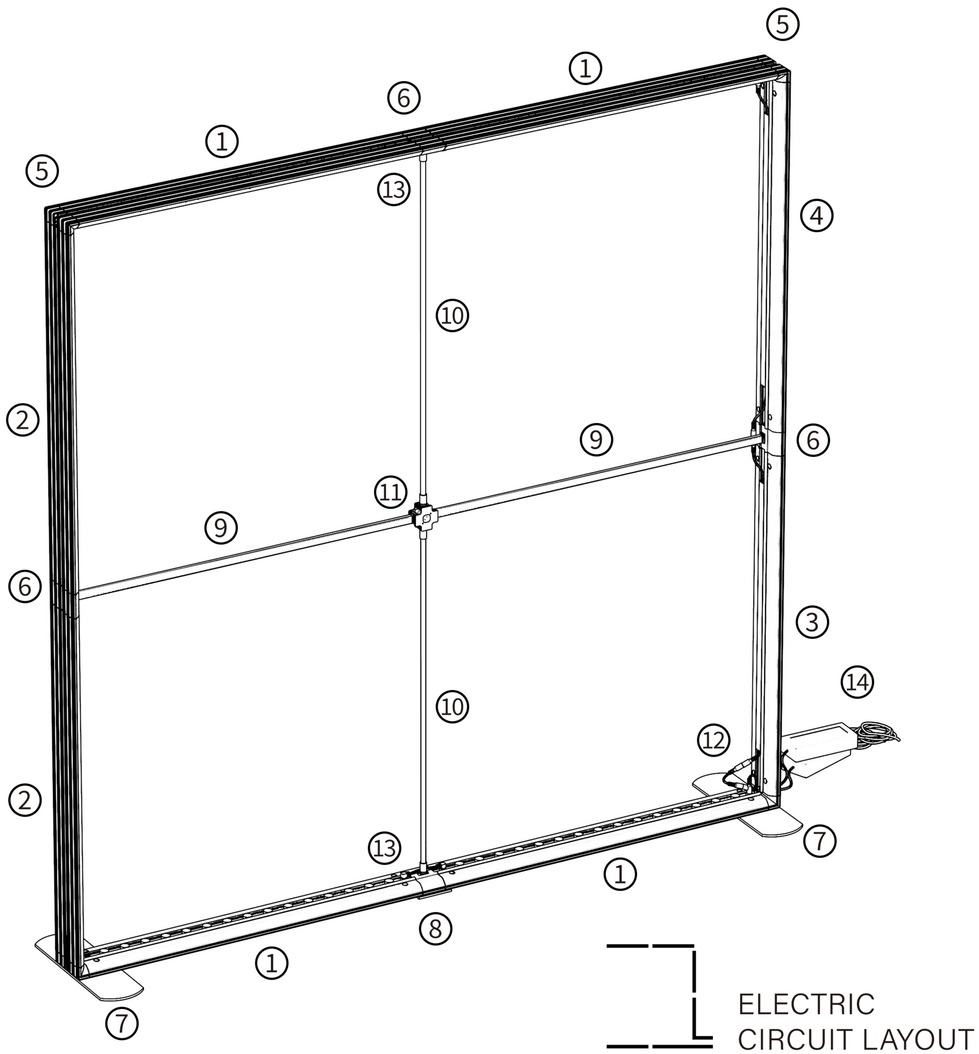

Module Light Box

①

Horizontal Profile x 4

②

Vertical profile x 2

③

Extrusion for female & male connecting wire x 1

④ 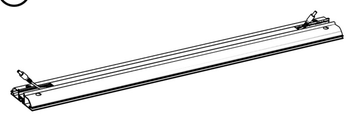

Extrusion for double male connecting wire x 1

⑤

Corner Part x 2

⑥ 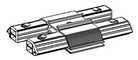

Cornnector Part x 3

⑦ 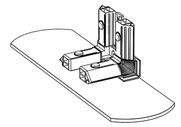

Base Foot x 2

⑧ 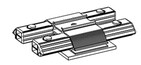

Base Foot x 1
Using For Big Size

⑨

Support Pole x 2

⑩ 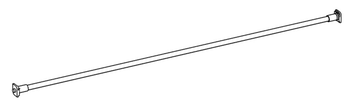

Round Shape Support Pole x 2

⑪

Cross Part x 1

⑫

Double Female Connecting Wire x 1

⑬

Double Male Connecting Wire x 2

⑭ 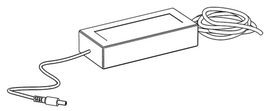

Power Supply x 2

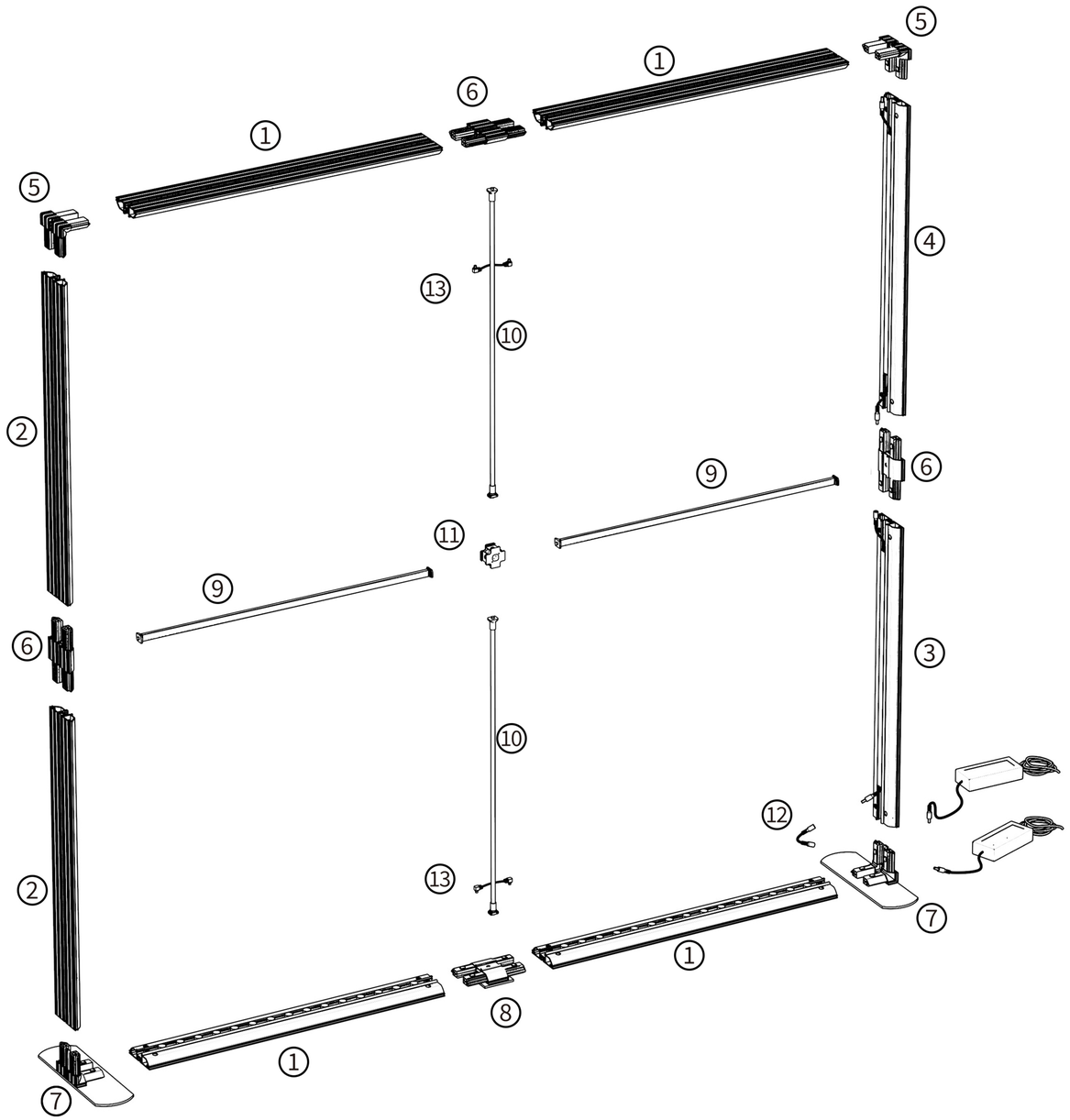

1

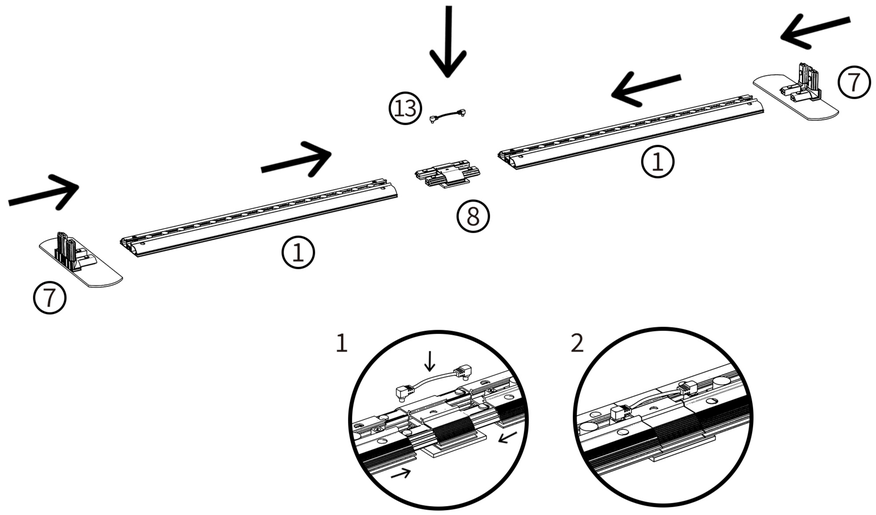

2

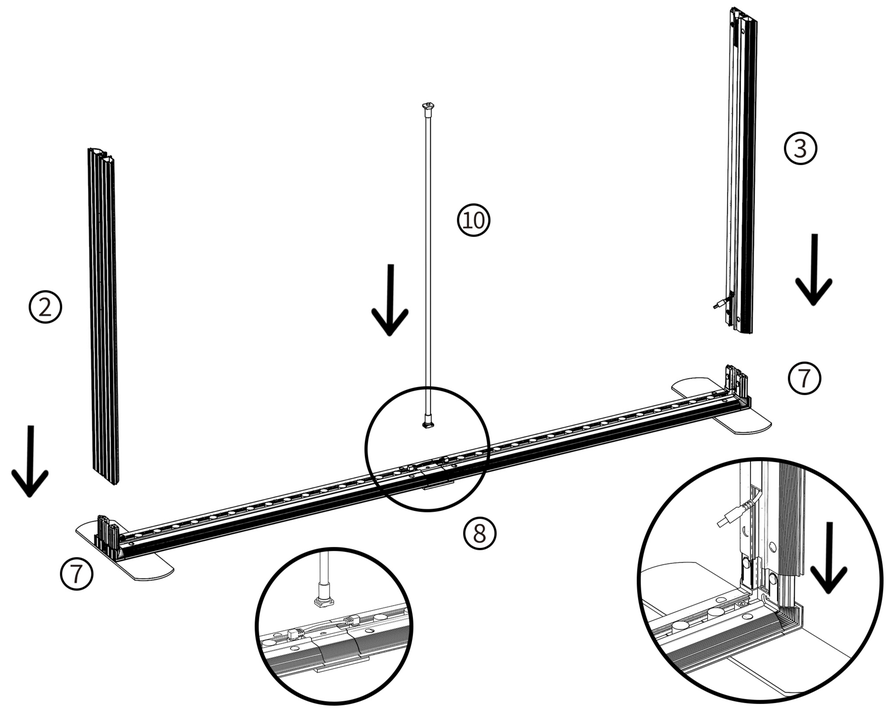

3

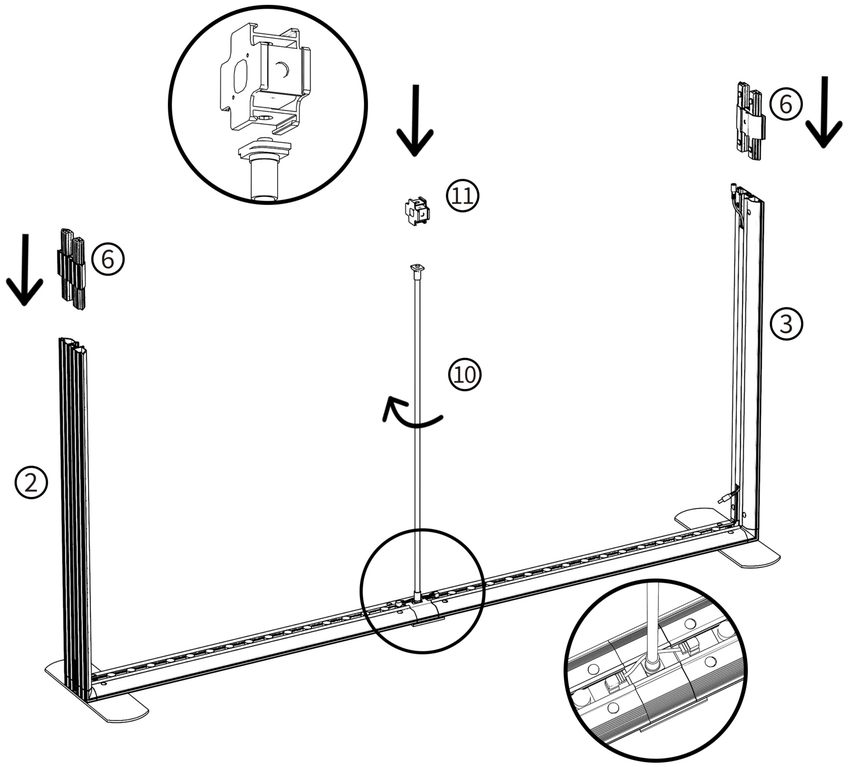

4

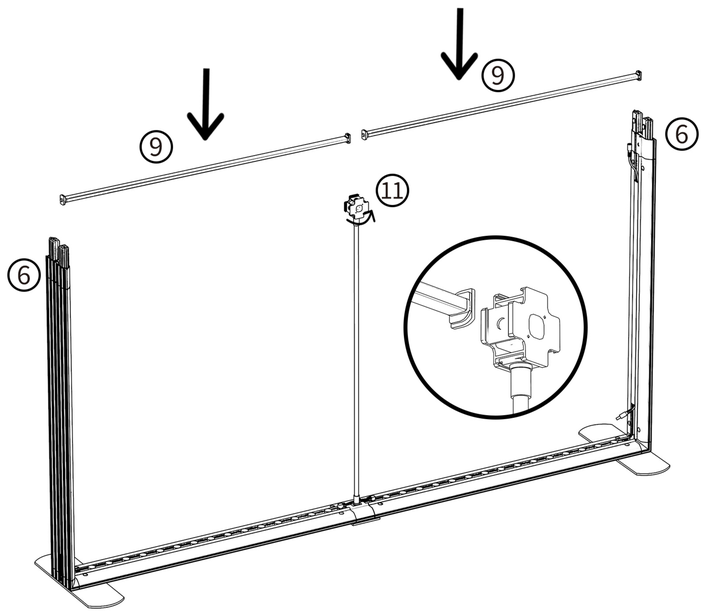

5

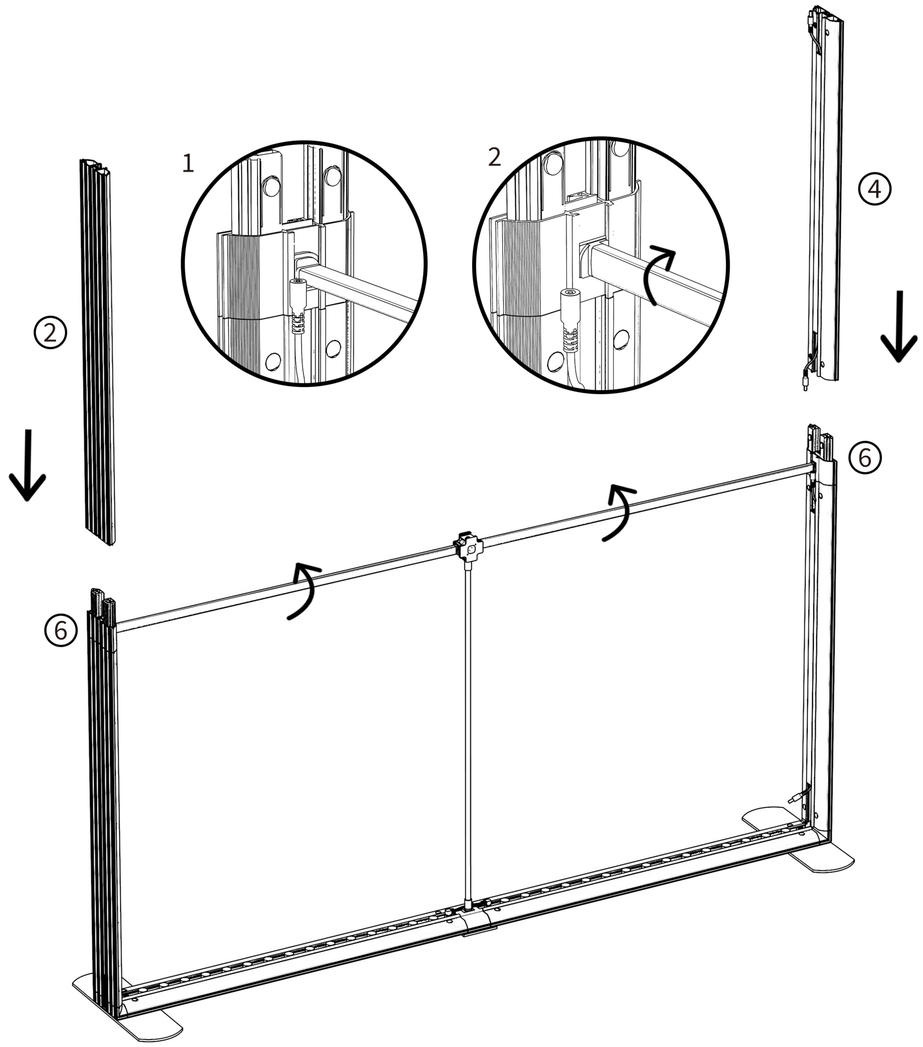

6

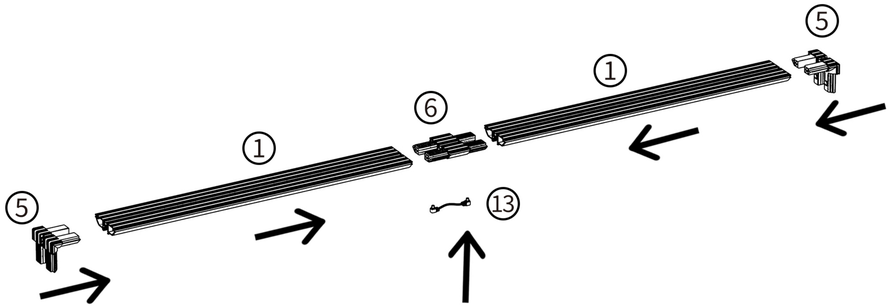

7

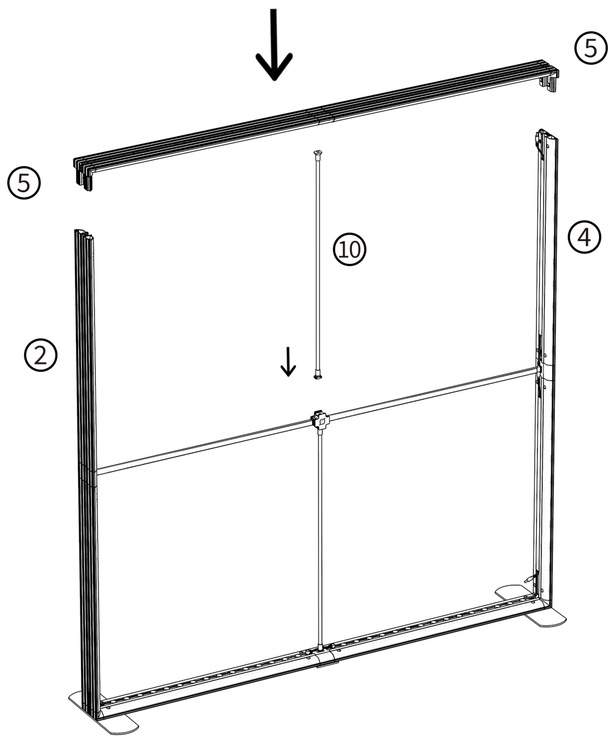

8

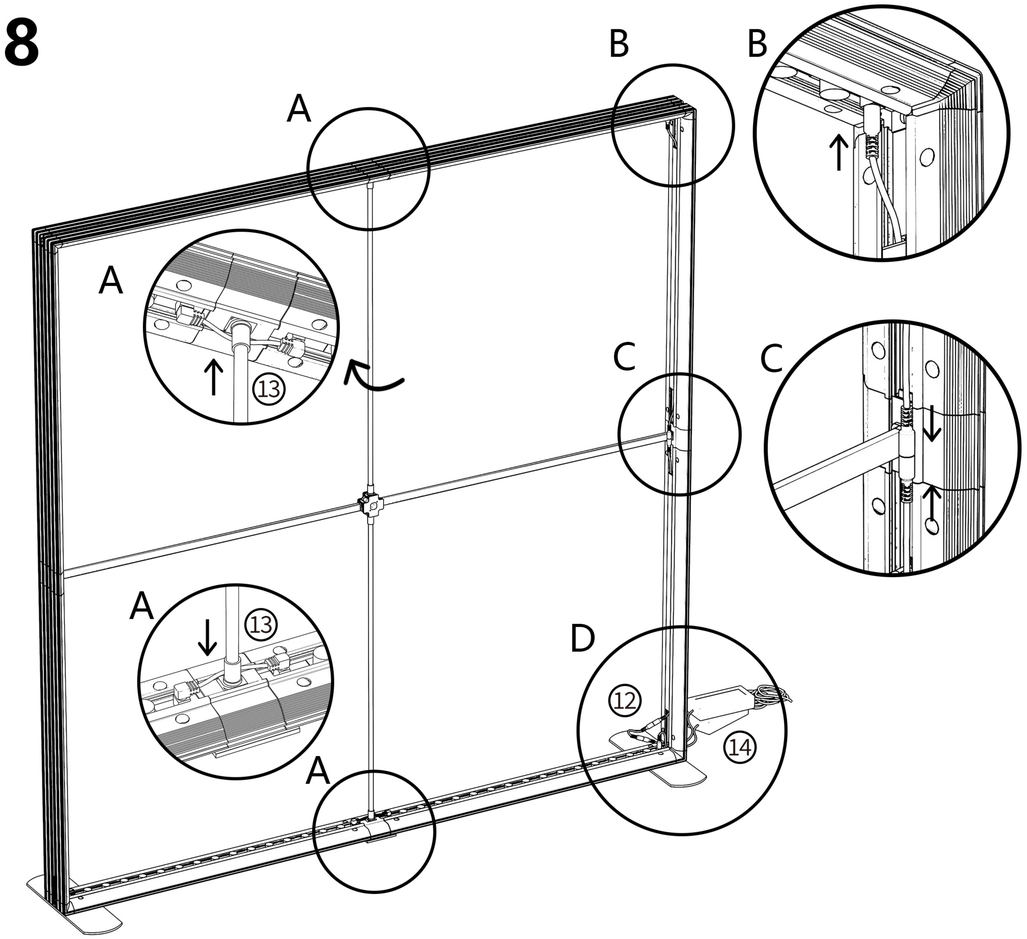

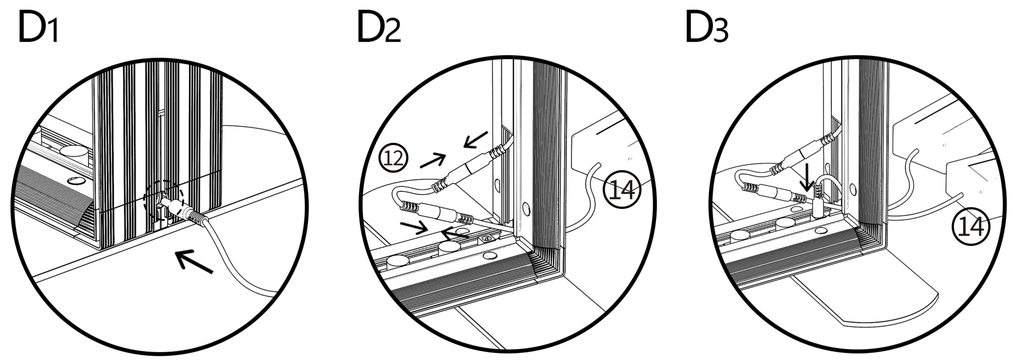

1500/1850/2000X2500(1000+1000+500)

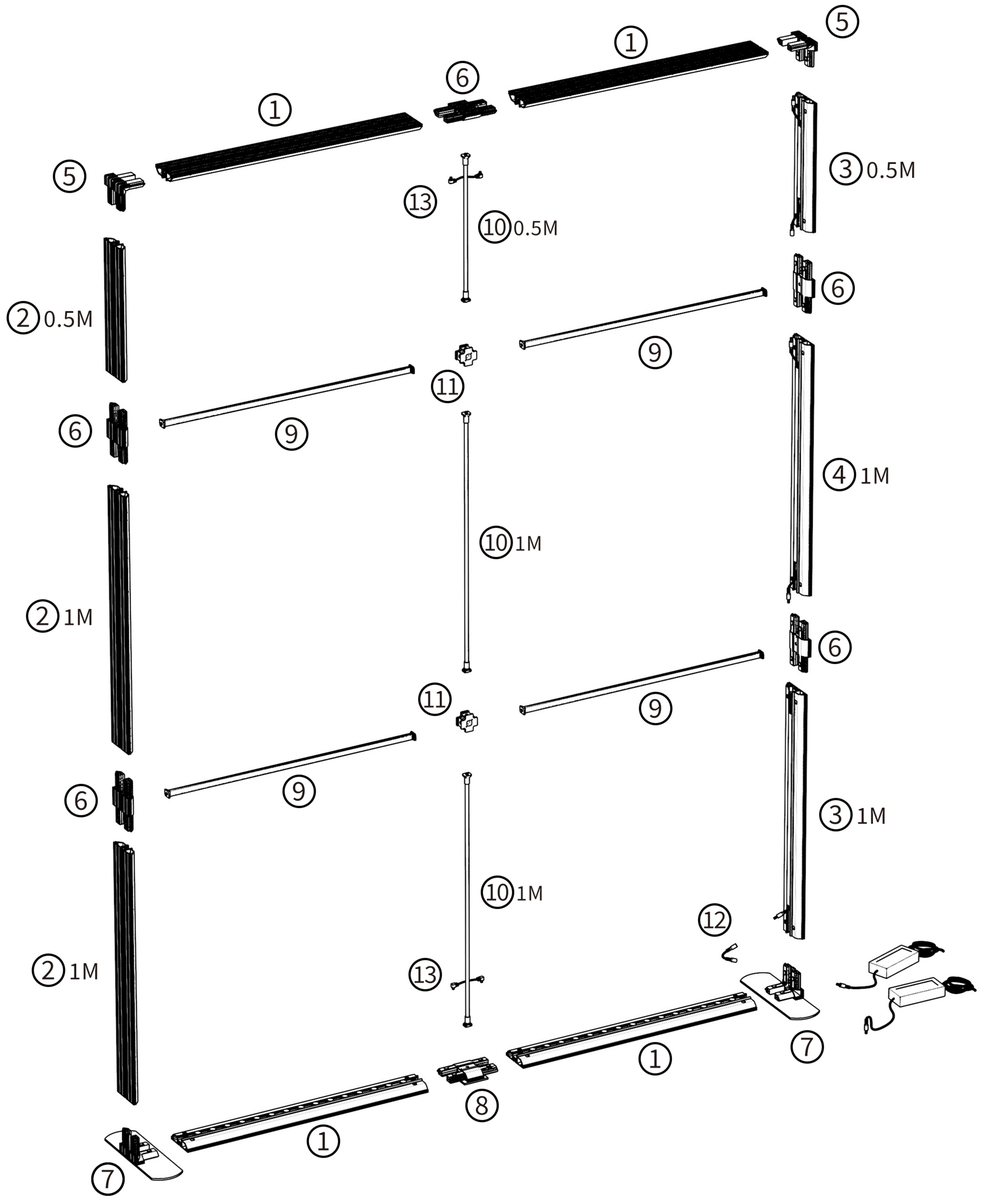

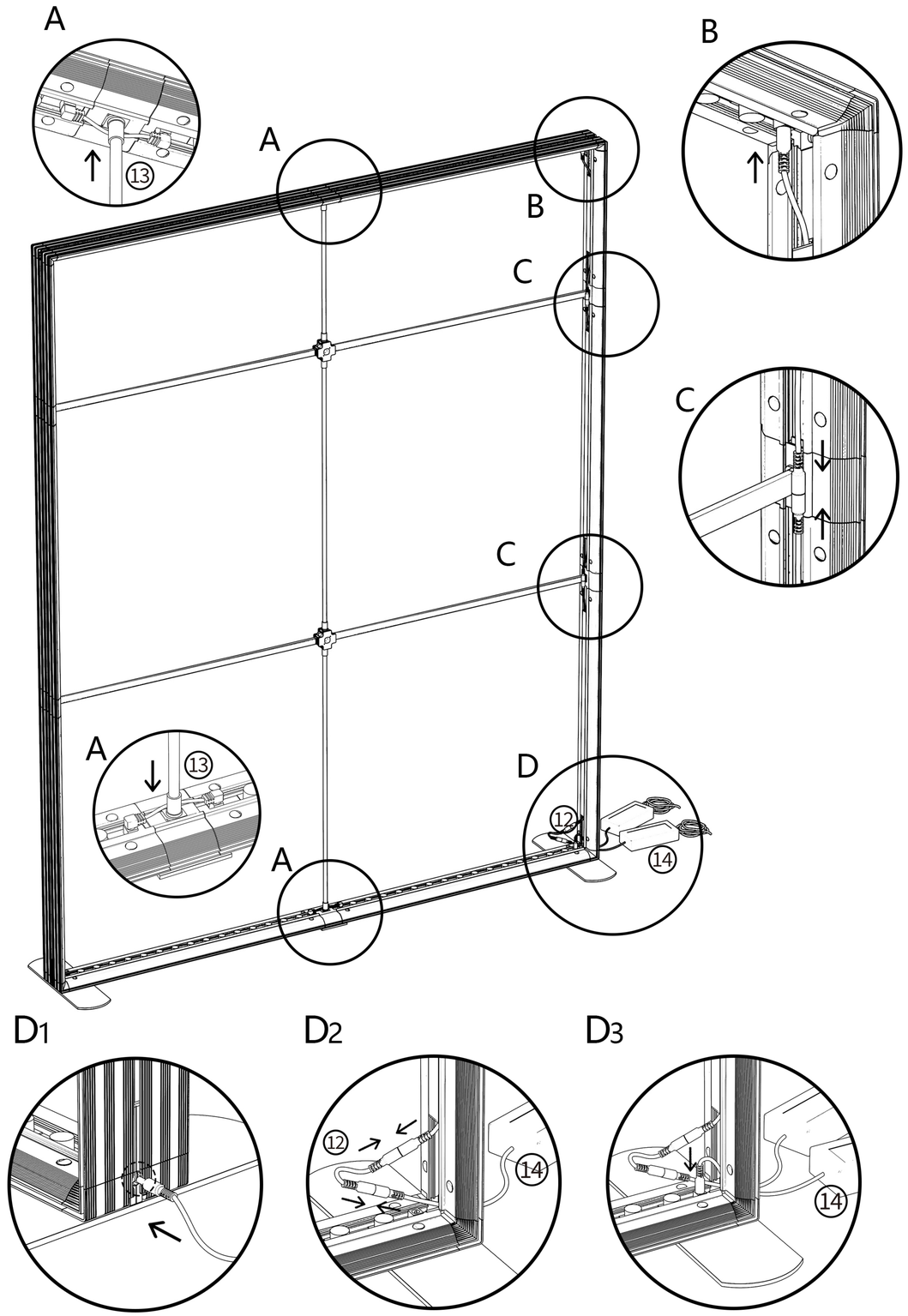

2500/2850/3000X1500(1000+500)
2500/2850/3000X2000(1000+1000)
2500/2850/3000X2250(1250+1000)
2500/2850/3000X2500(1250+1250)

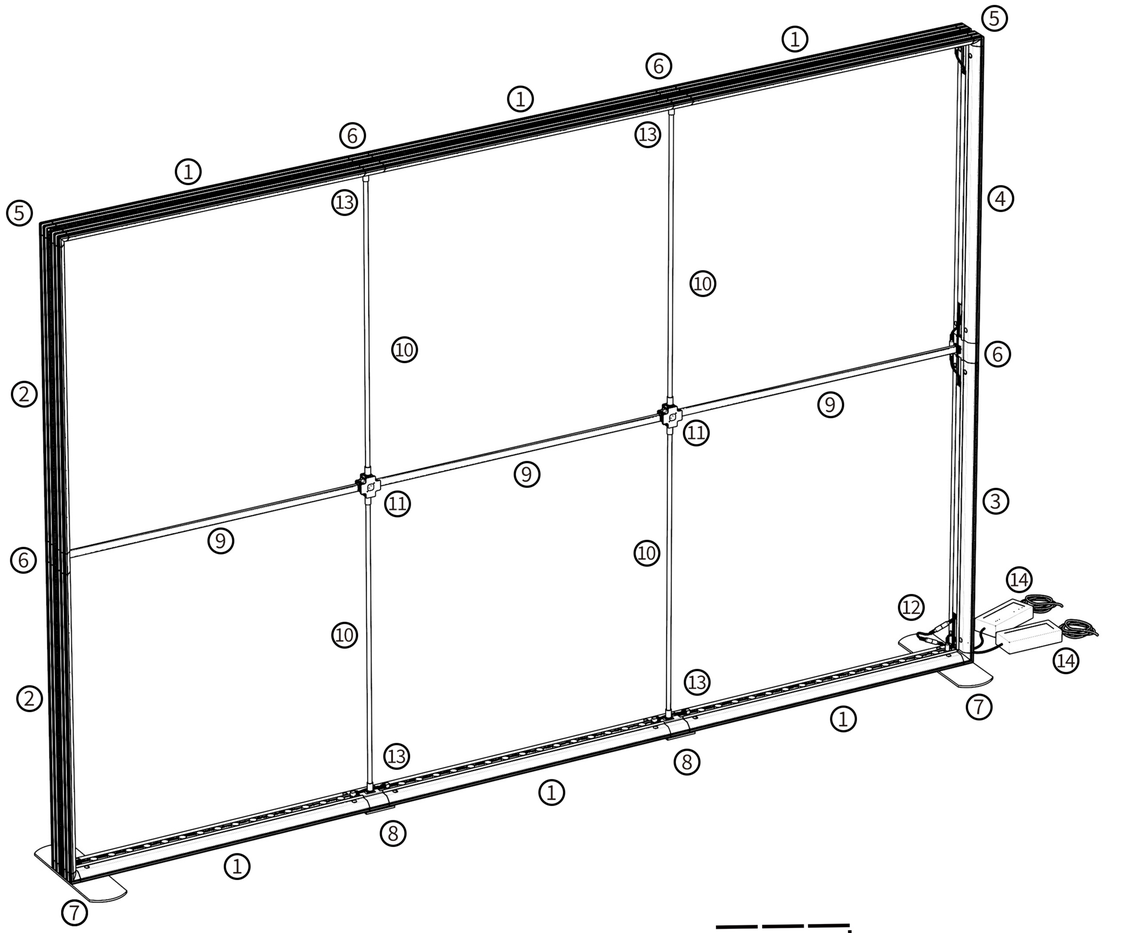

ELECTRIC
CIRCUIT LAYOUT

Module Light Box

①

Horizontal Profile x 6

②

Vertical profile x 2

③

Extrusion for female & male connecting wire x 1

④ 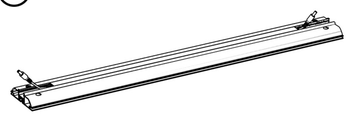

Extrusion for double male connecting wire x 1

⑤

Corner Part x 2

⑥ 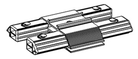

Cornnector Part x 4

⑦ 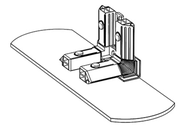

Base Foot x 2

⑧ 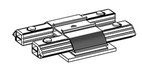

Base Foot x 2
Using For Big Size

⑨

Support Pole x 3

⑩ 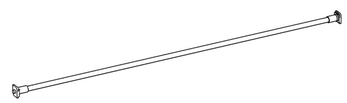

Round Shape Supporting Pole x 4

⑪

Cross Part x 2

⑫

Double Female Connecting Wire x 1

⑬

Double Male Connecting Wire x 4

⑭ 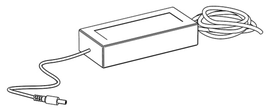

Power Supply x 2

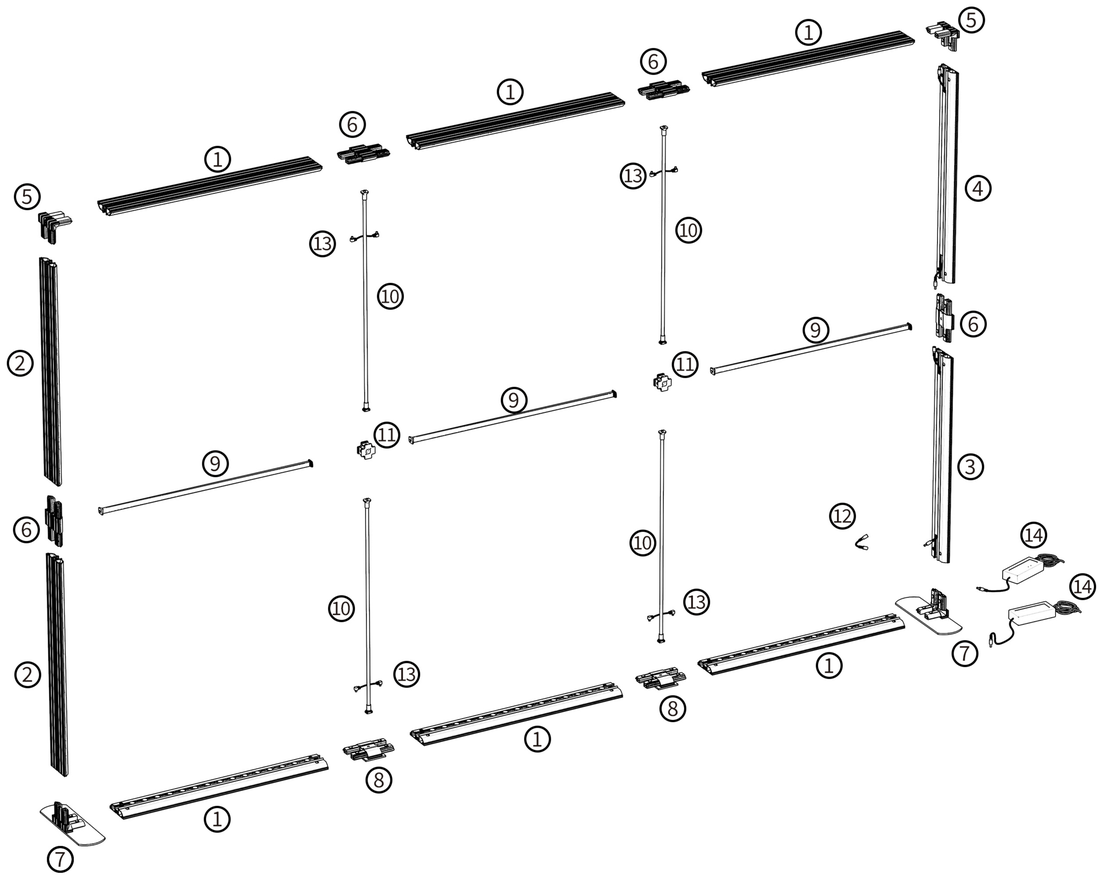

1

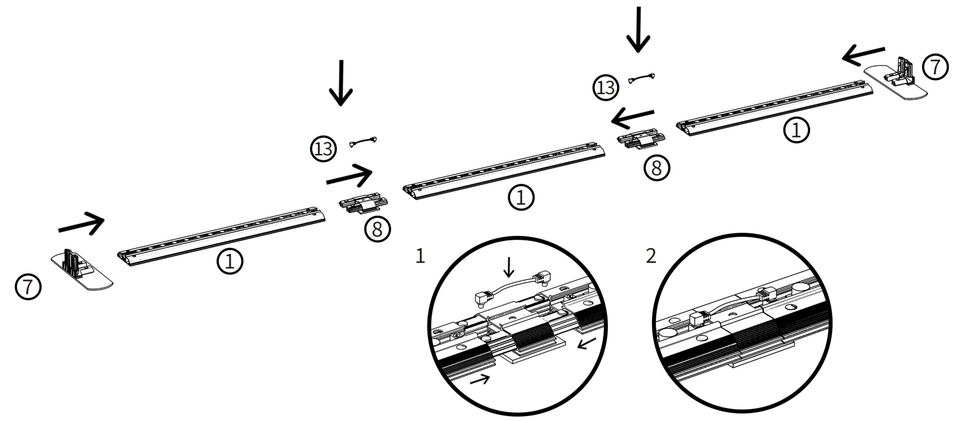

2

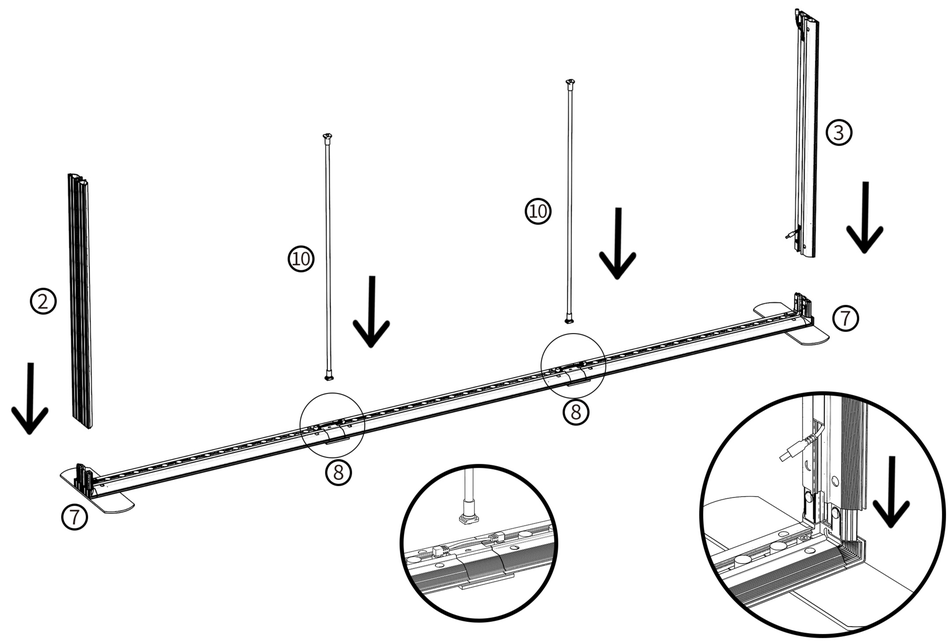

3

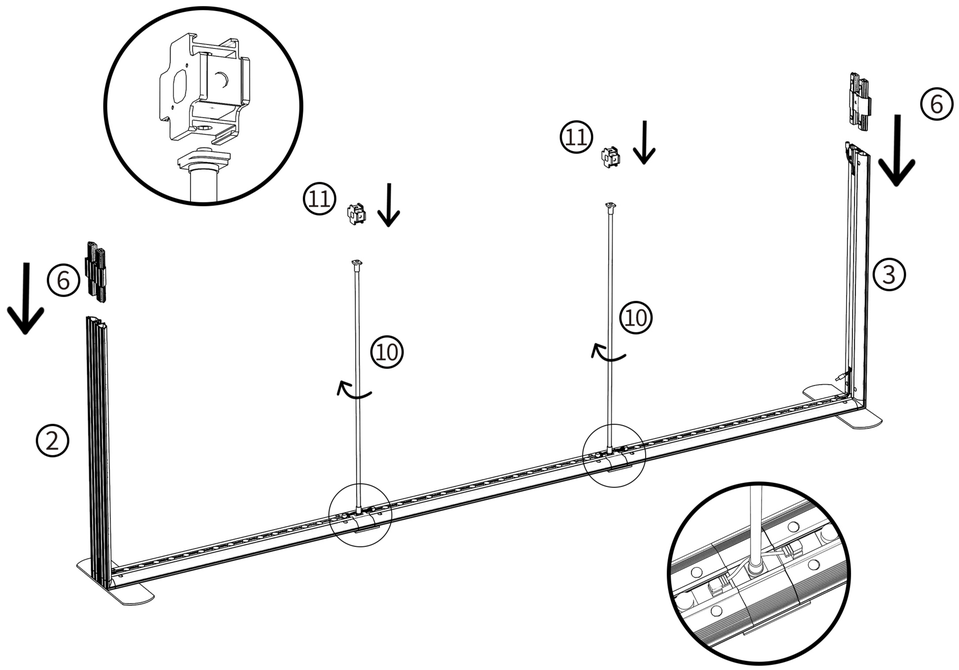

4

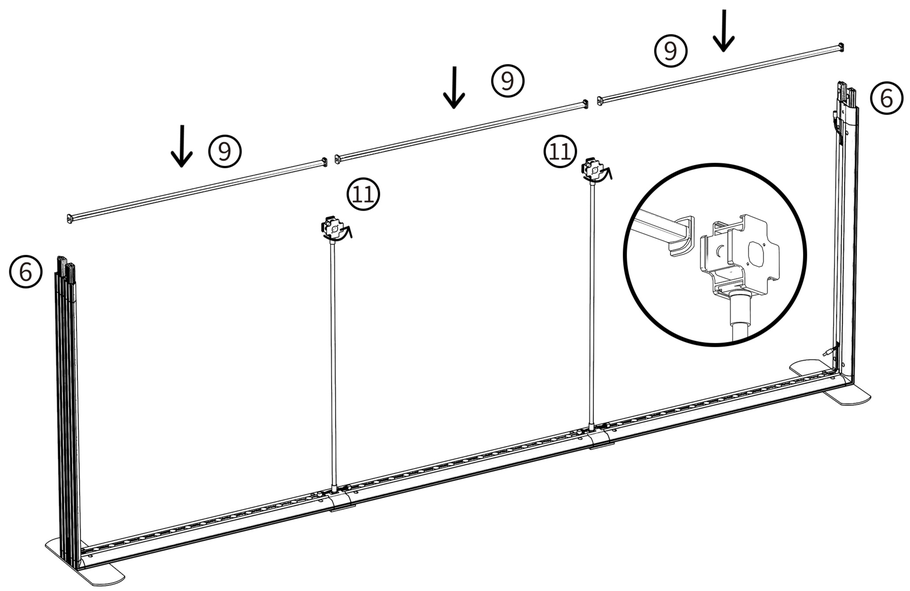

5

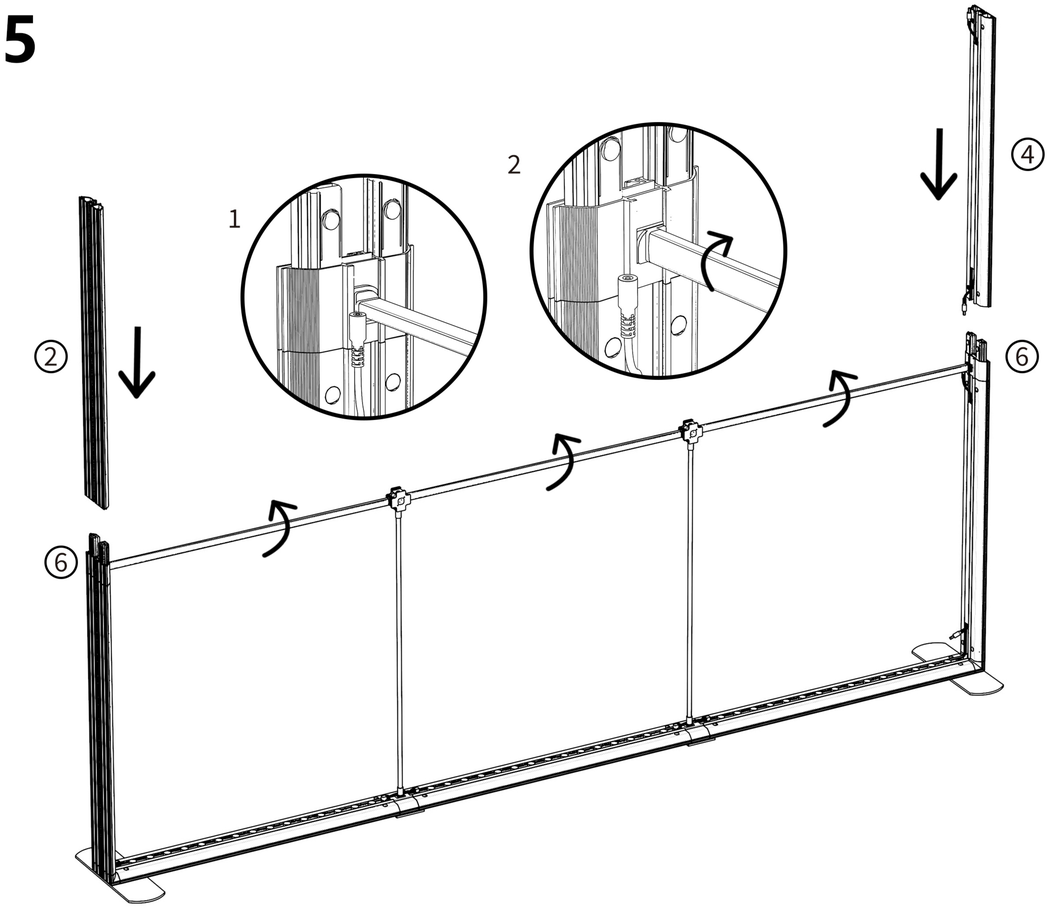

6

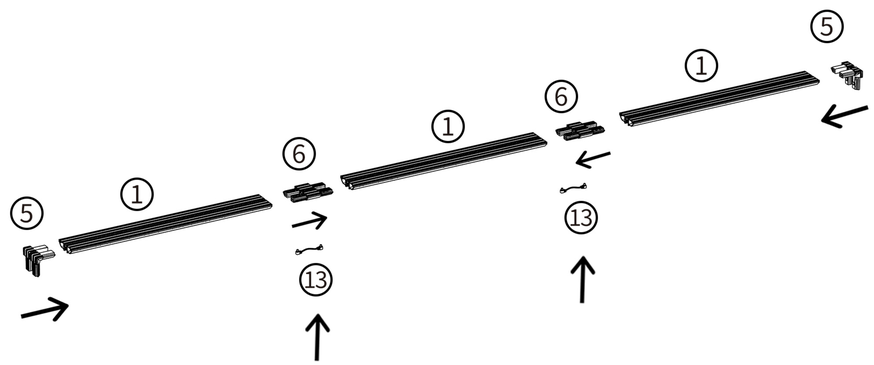

7

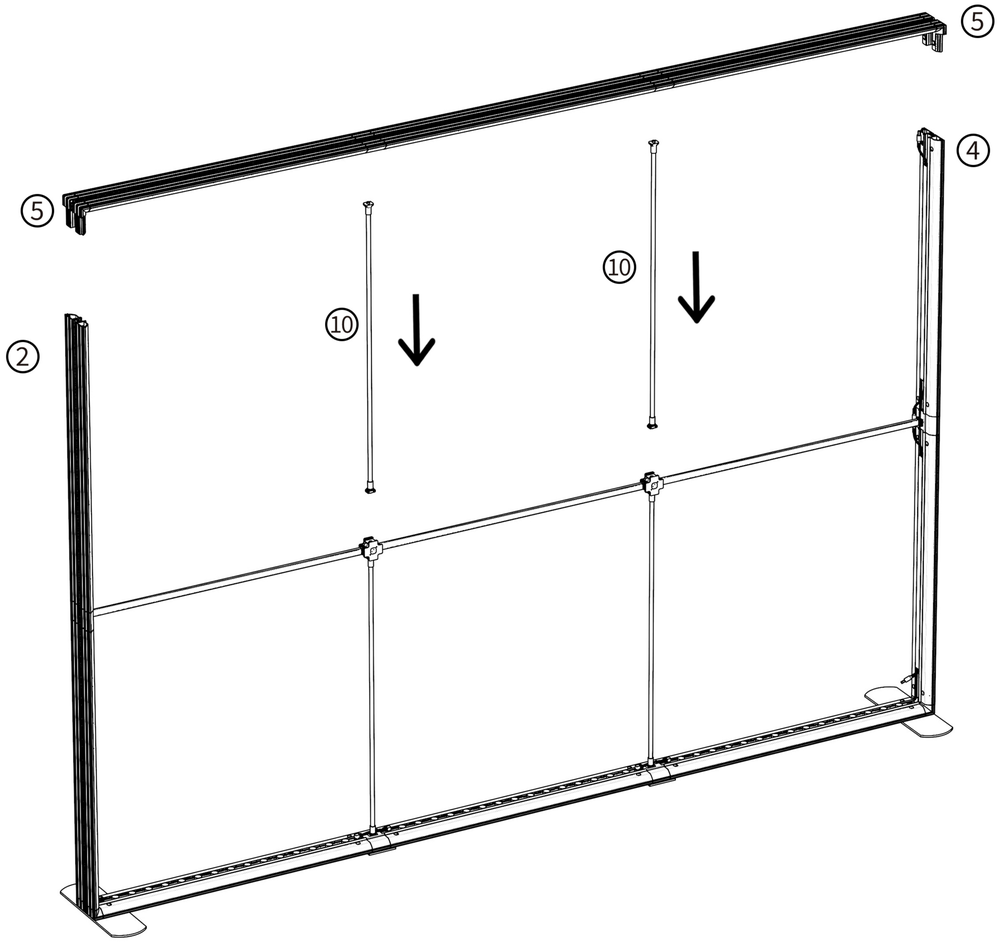

8

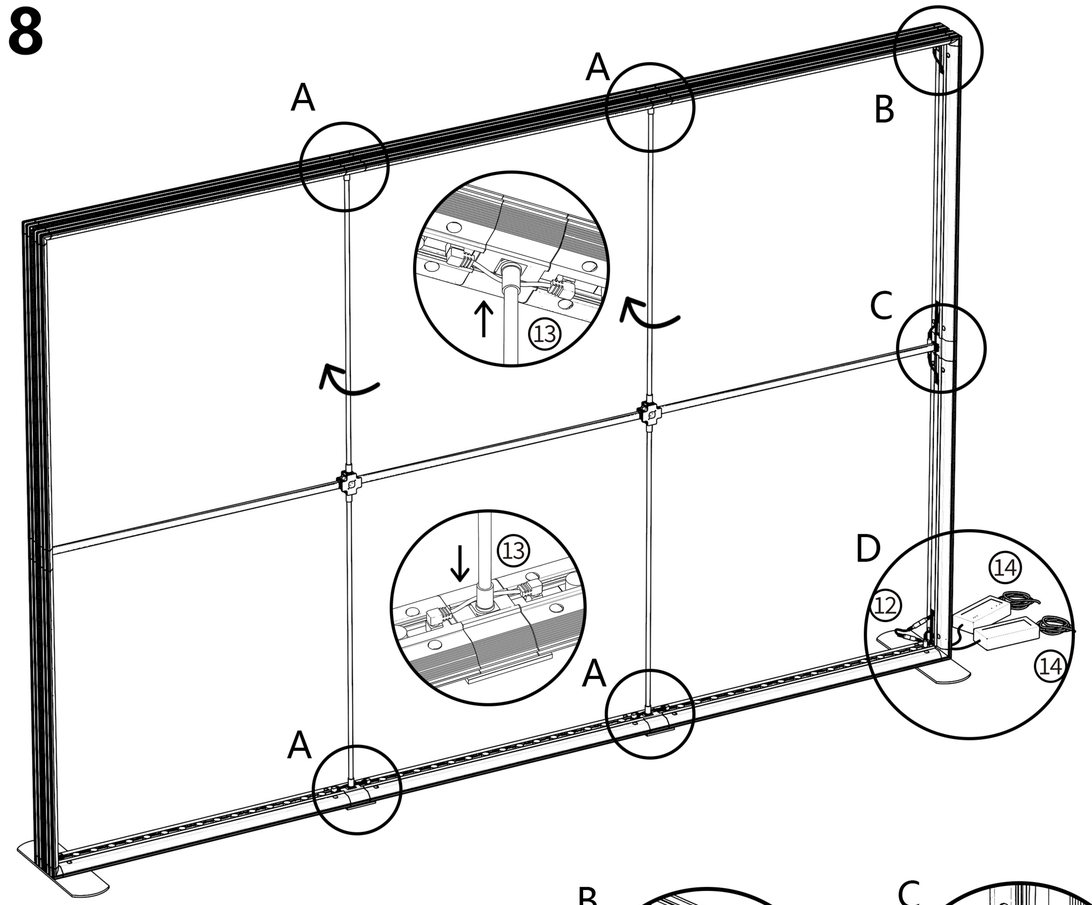

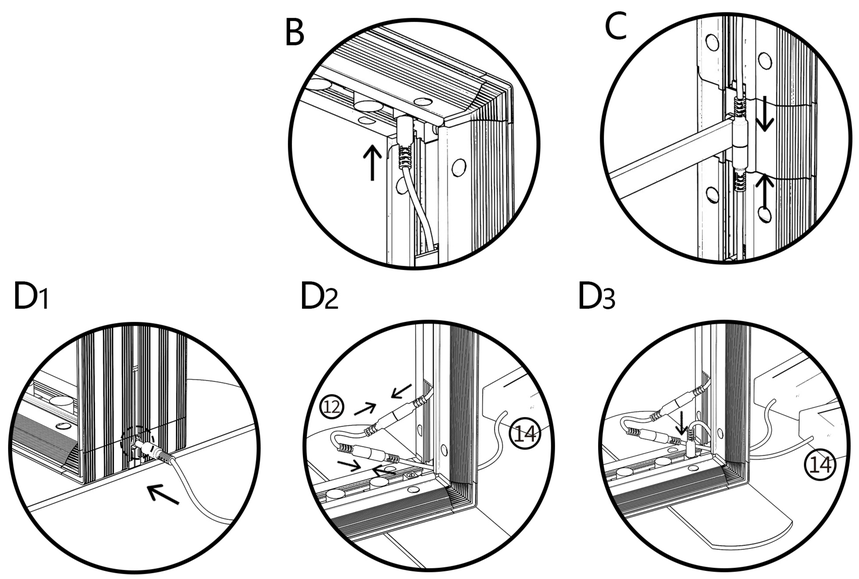

2500/2850/3000X2500(1000+1000+500)

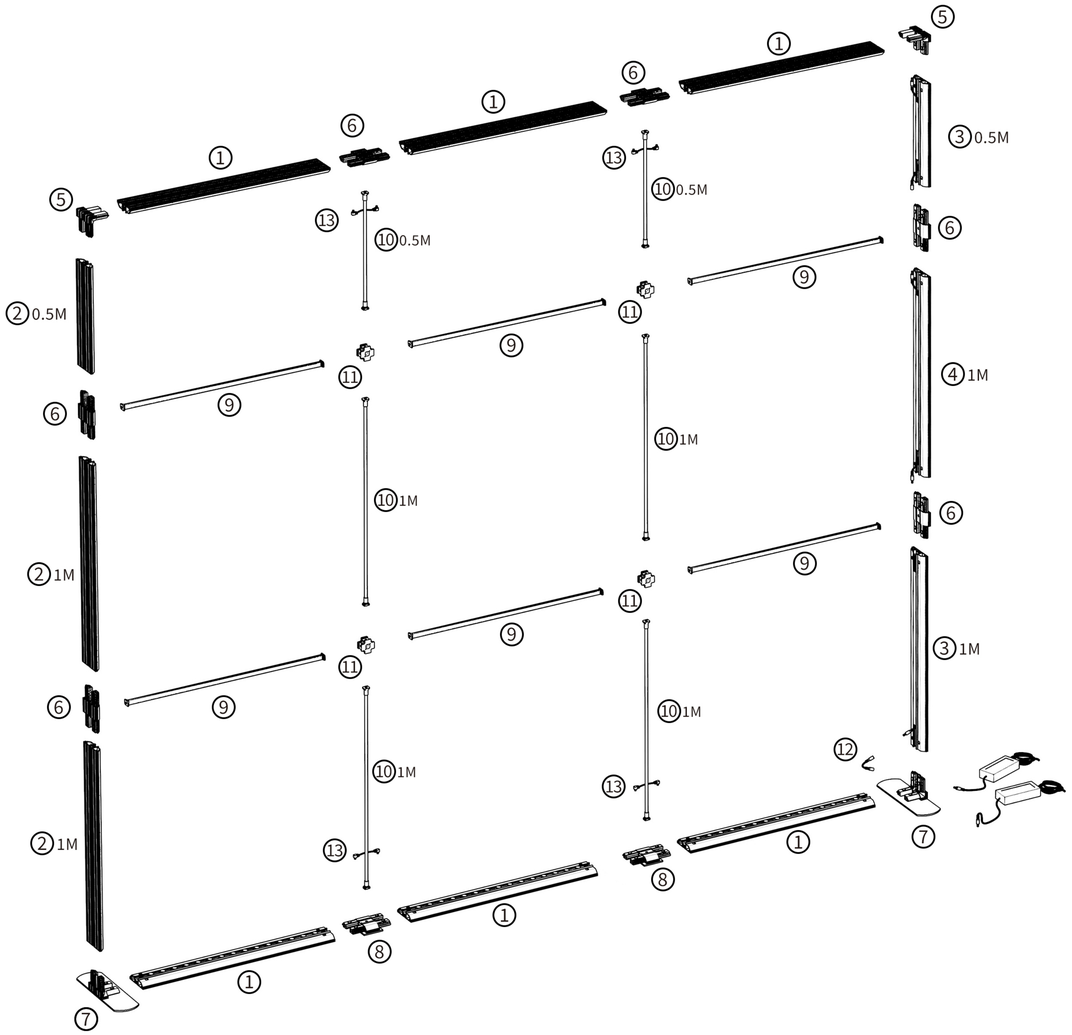

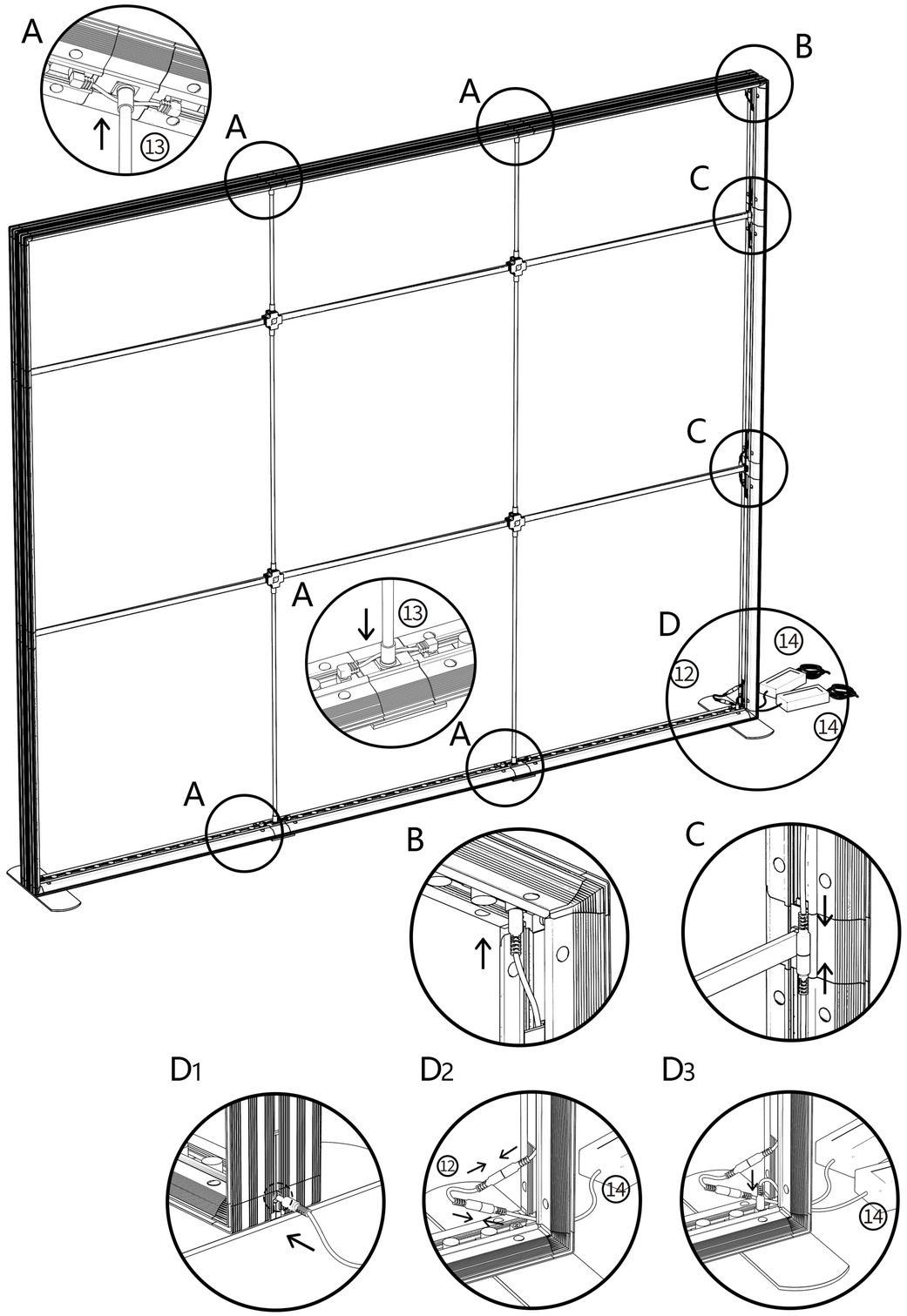

3500/3850/4000X1500(1000+500)
3500/3850/4000X2000(1000+1000)
3500/3850/4000X2250(1250+1000)
3500/3850/4000X2500(1250+1250)

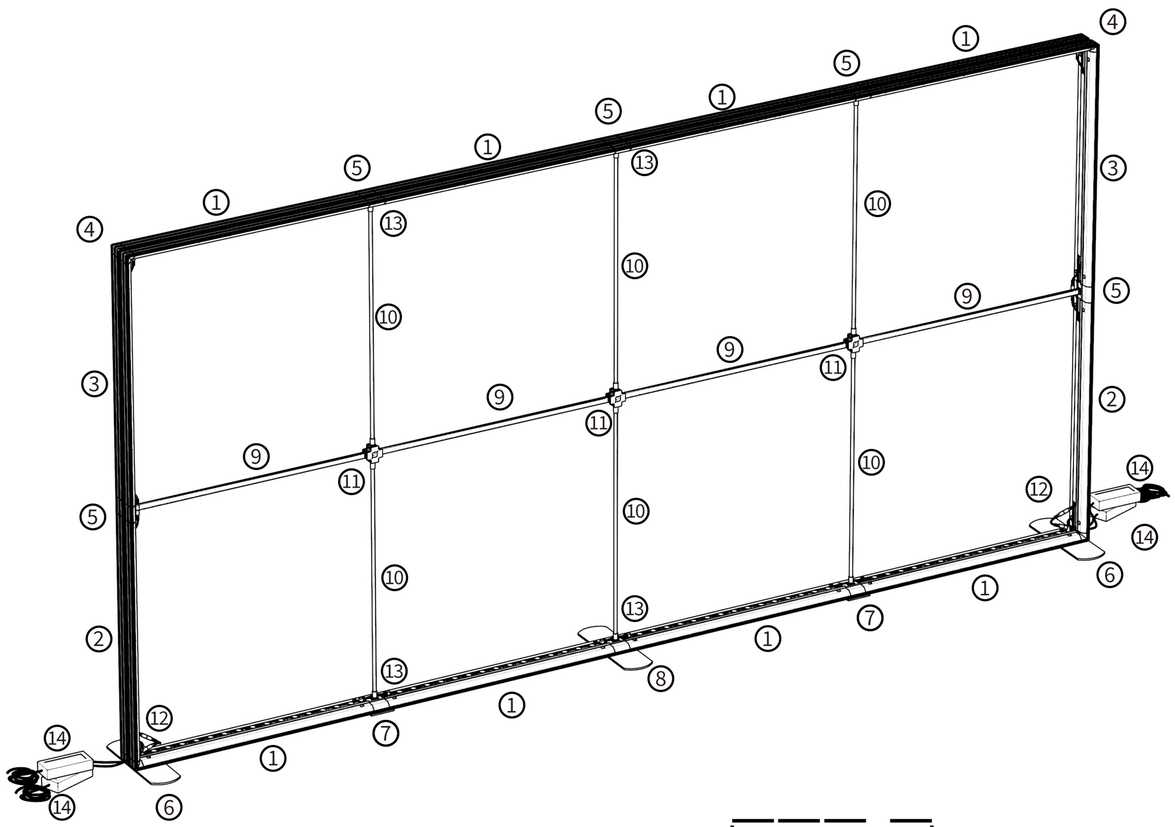

ELECTRIC
CIRCUIT LAYOUT

Module Light Box

①

Horizontal Profile x 8

② 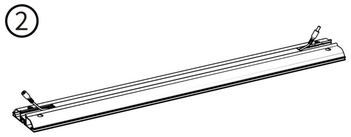

Extrusion for female & male connecting wire x 2

③

Extrusion for double male connecting wire x 2

④

Corner Part x 2

⑤ 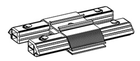

Cornnector Part x 5

⑥ 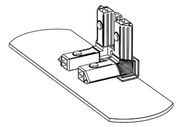

Base Foot x 2

⑦ 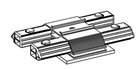

Base Foot x 2
Using For Big Size

⑧ 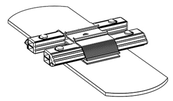

Base Foot x 1
Using For Big Size

⑨

Support Pole x 4

⑩ 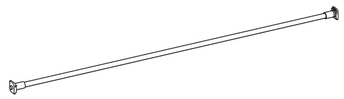

Round Shape Support Pole x 6

⑪

Cross Part x 3

⑫

Double Female Connecting Wire x 2

⑬

Double Male Connecting Wire x 4

⑭ 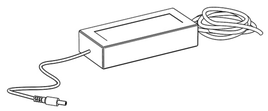

Power Supply x 4

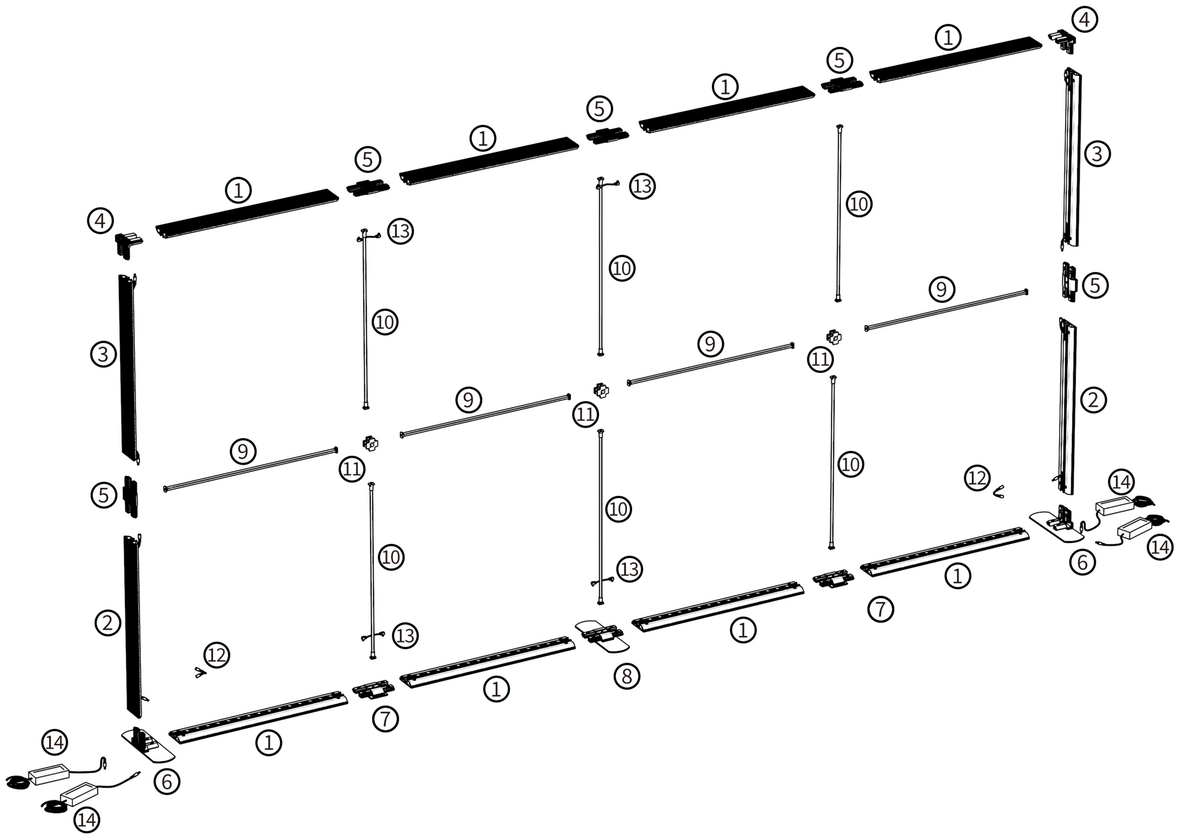

1

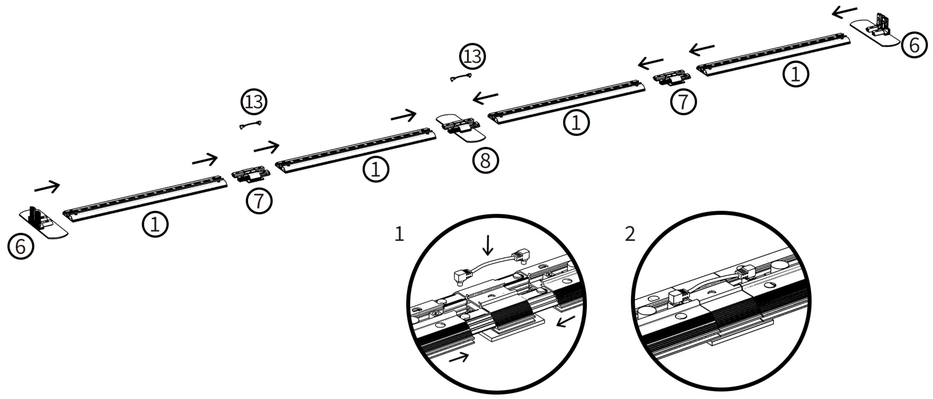

2

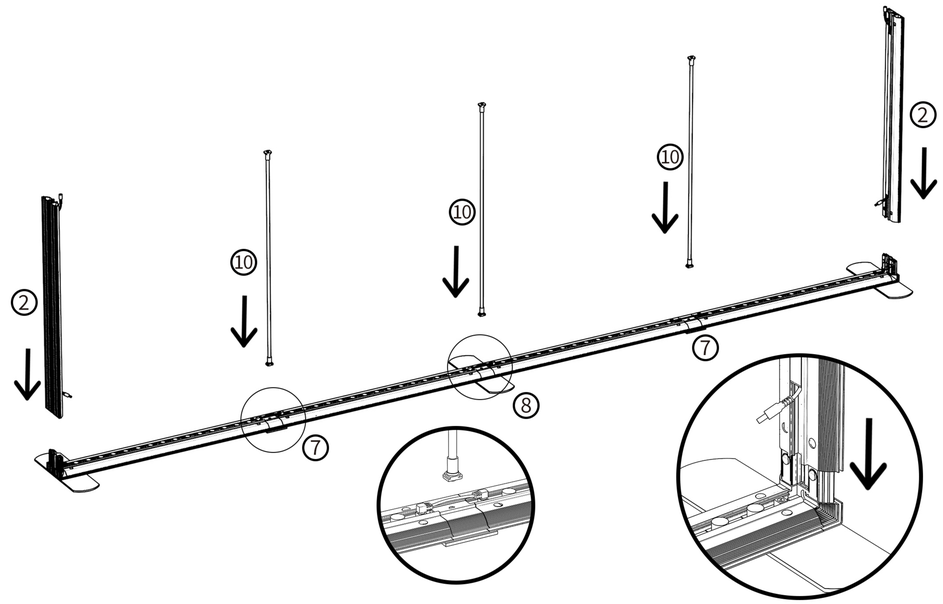

3

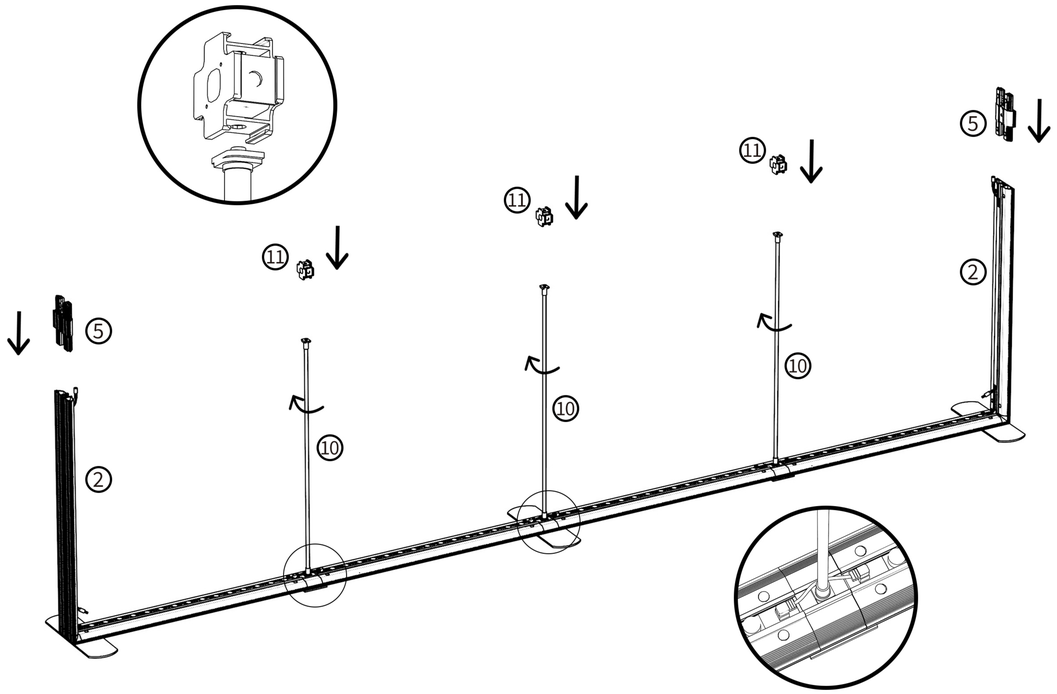

4

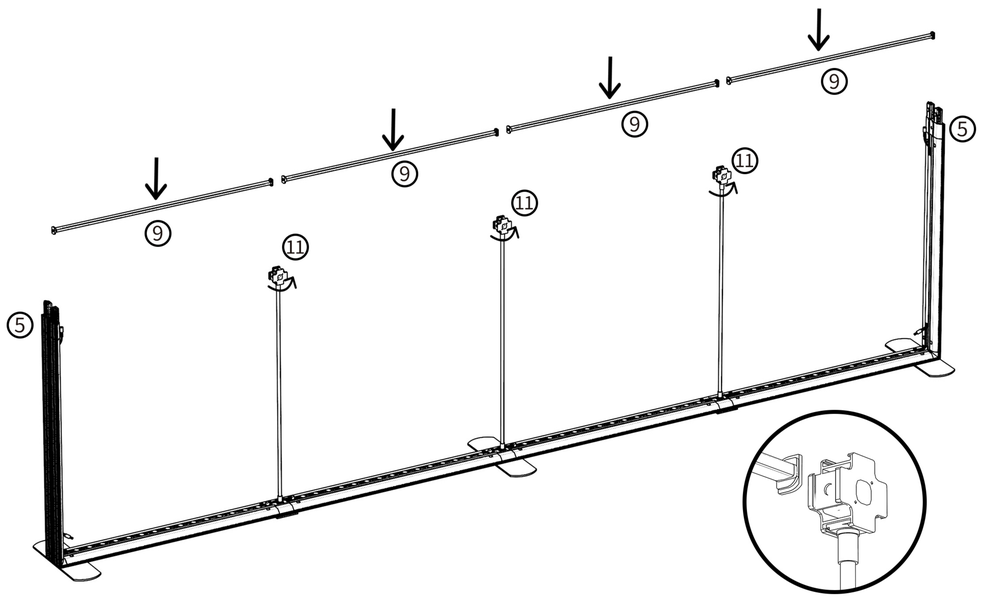

5

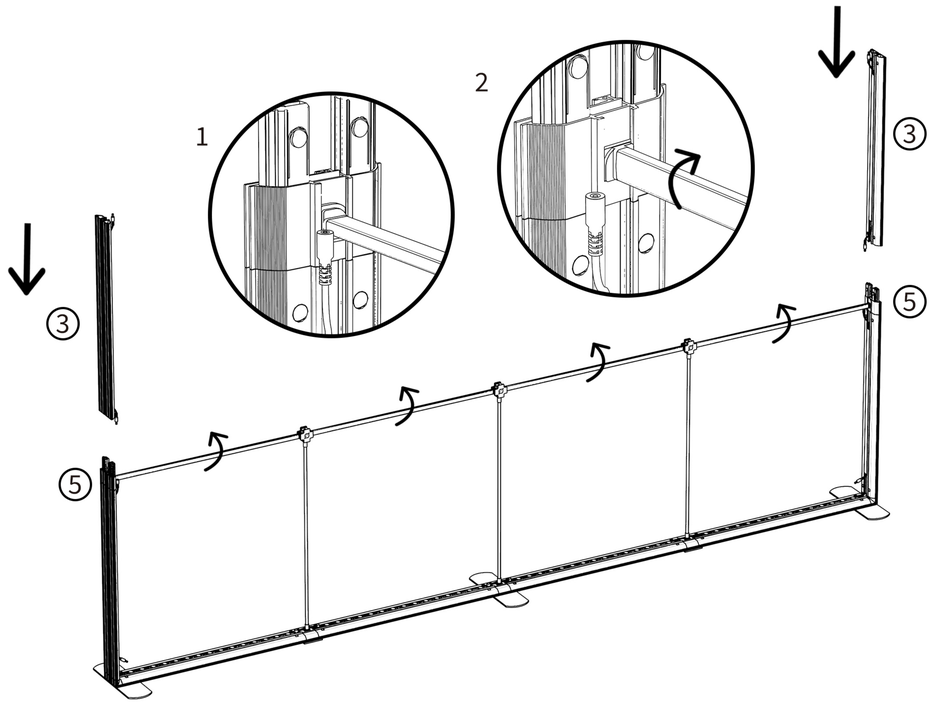

6

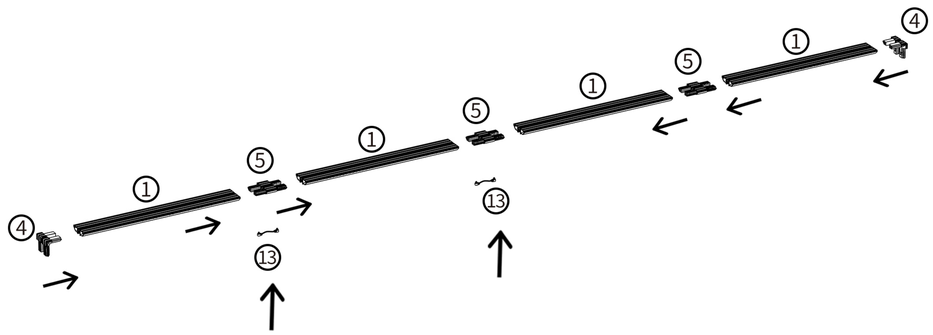

7

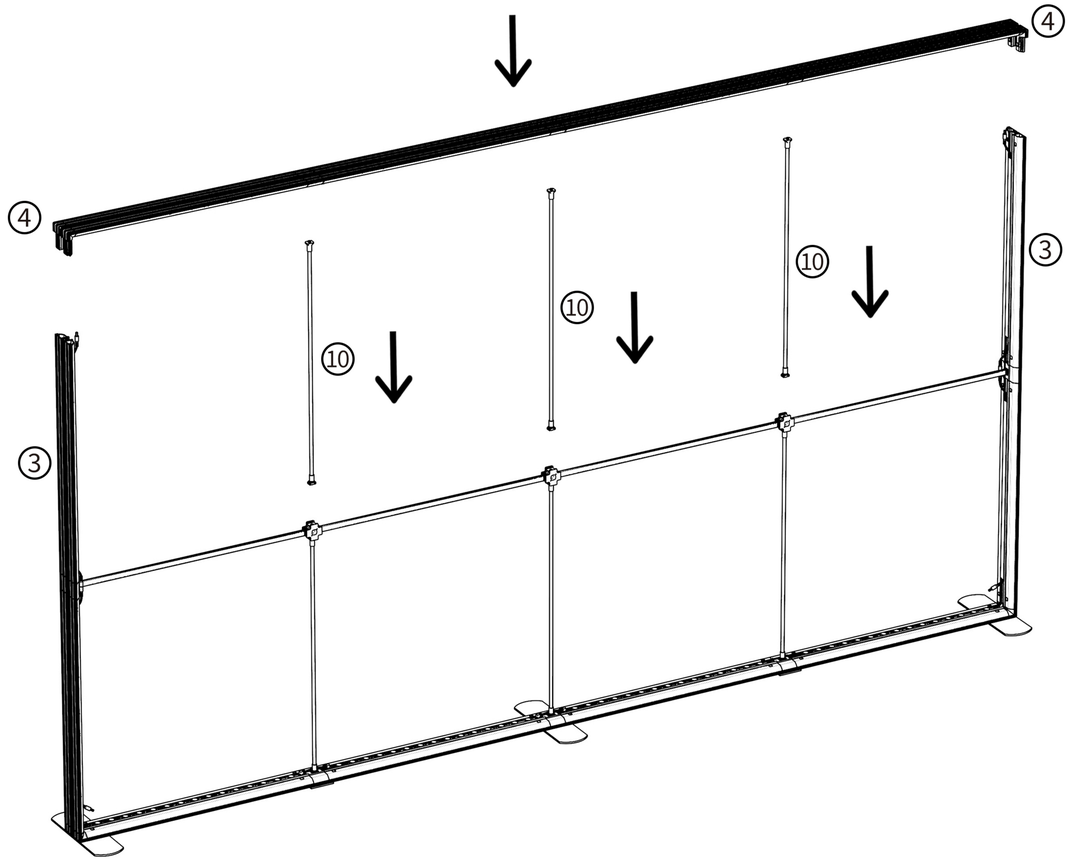
4
4
10
10
10
3
3

8

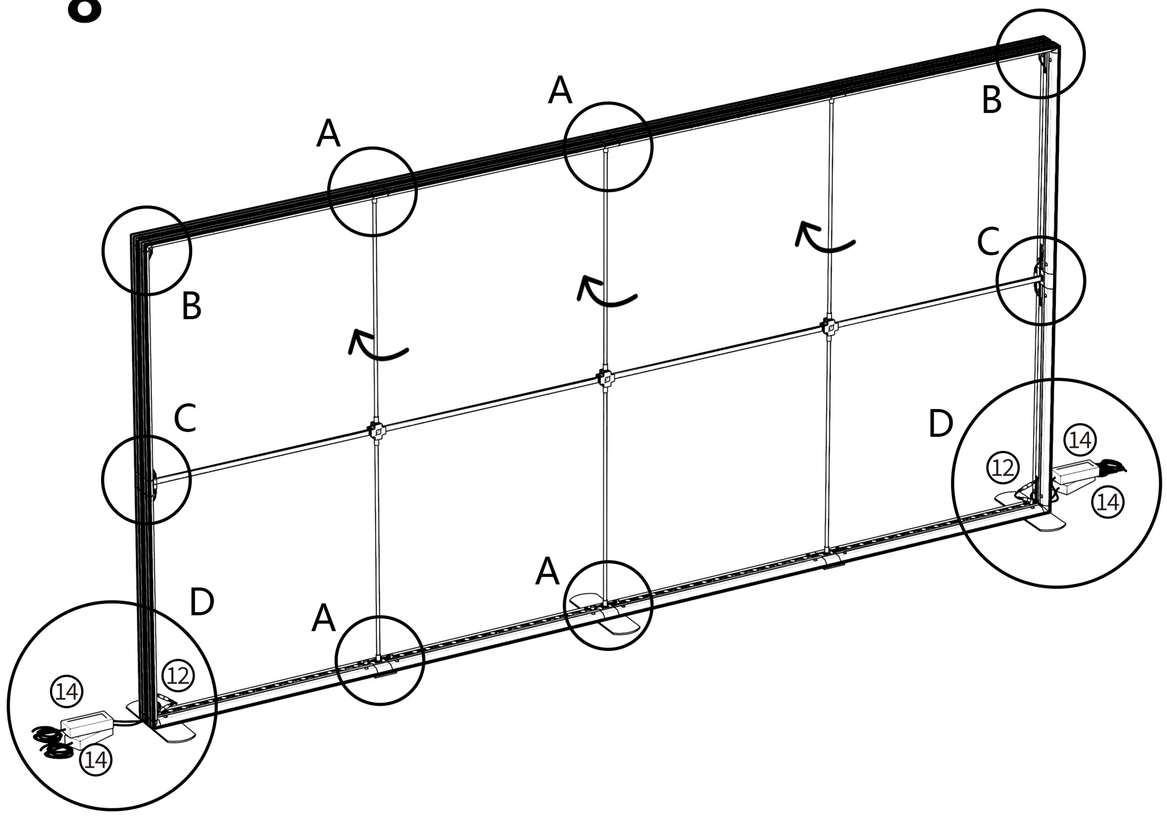
A
A
B
B
C
C
D
14
12
14
A
A
D
12
14
14

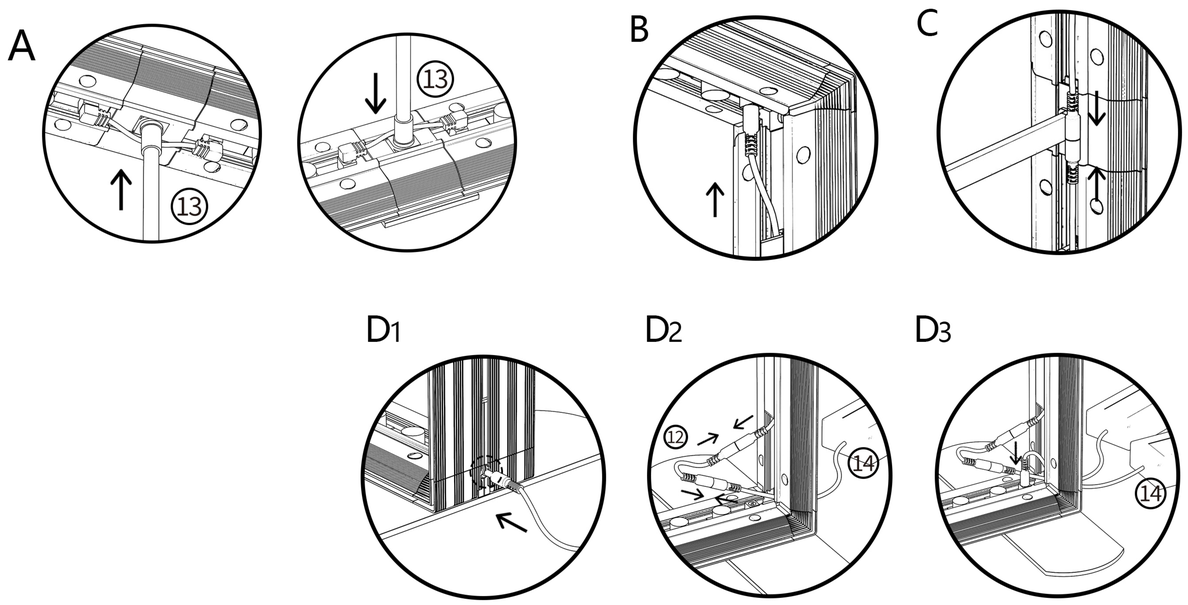
A
13
13
B
C
D1
D2
D3
12
14
14

3500/3850/4000X2500(1000+1000+500)

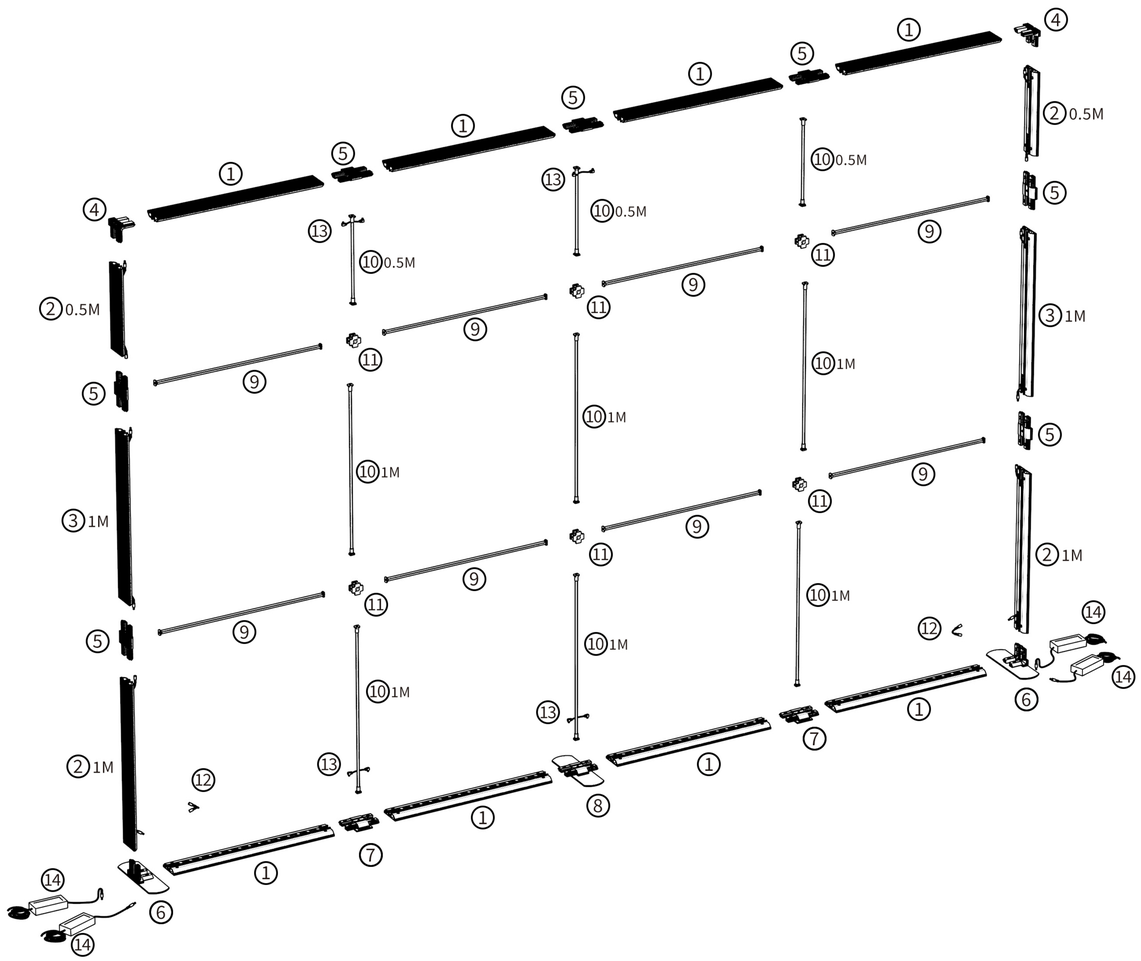

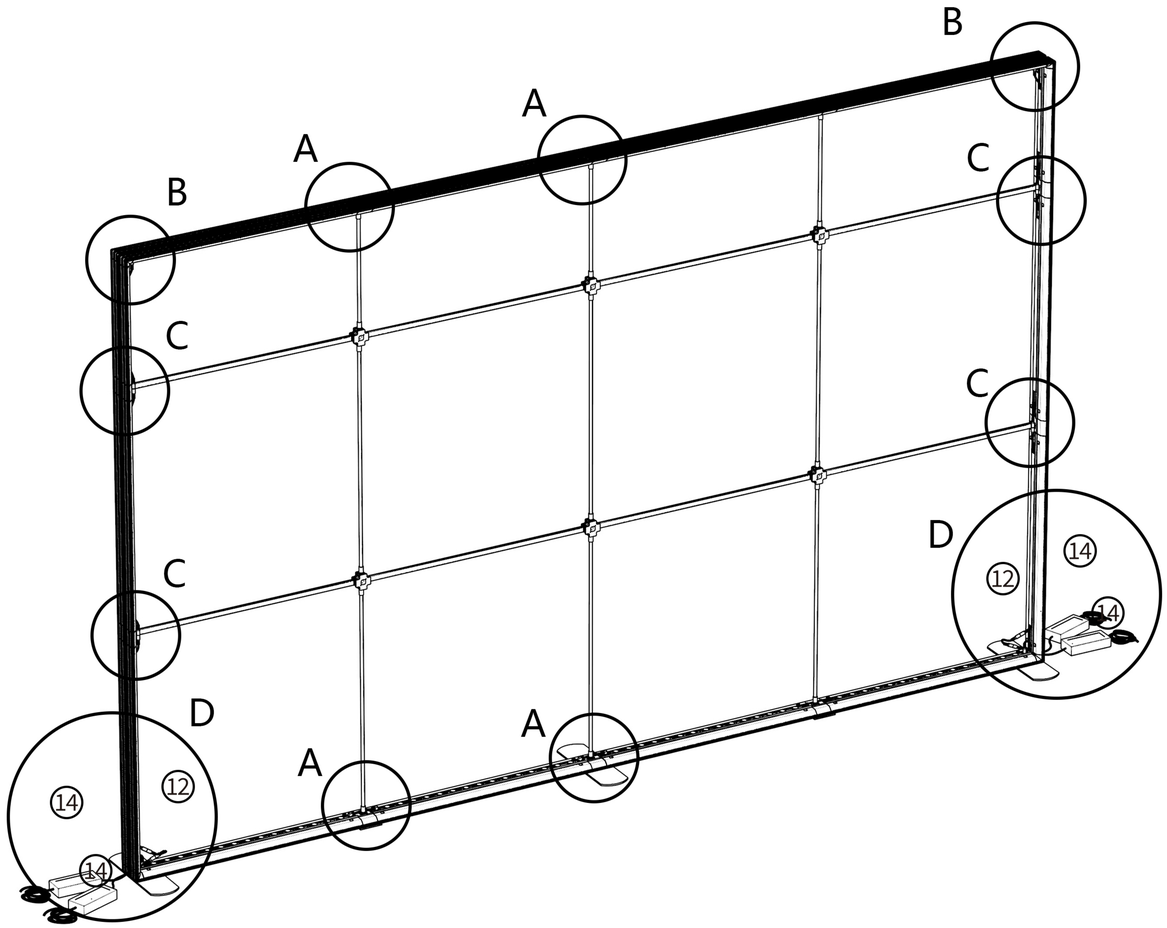

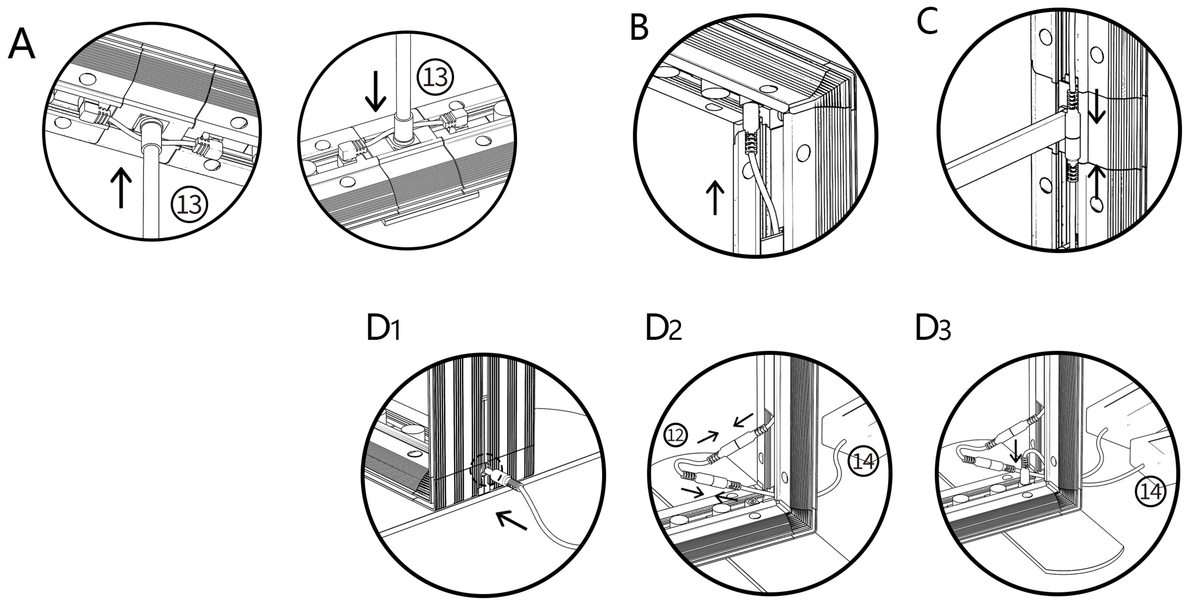

4500/4850/5000X1500(1000+500)
4500/4850/5000X2000(1000+1000)
4500/4850/5000X2250(1250+1000)
4500/4850/5000X2500(1250+1250)

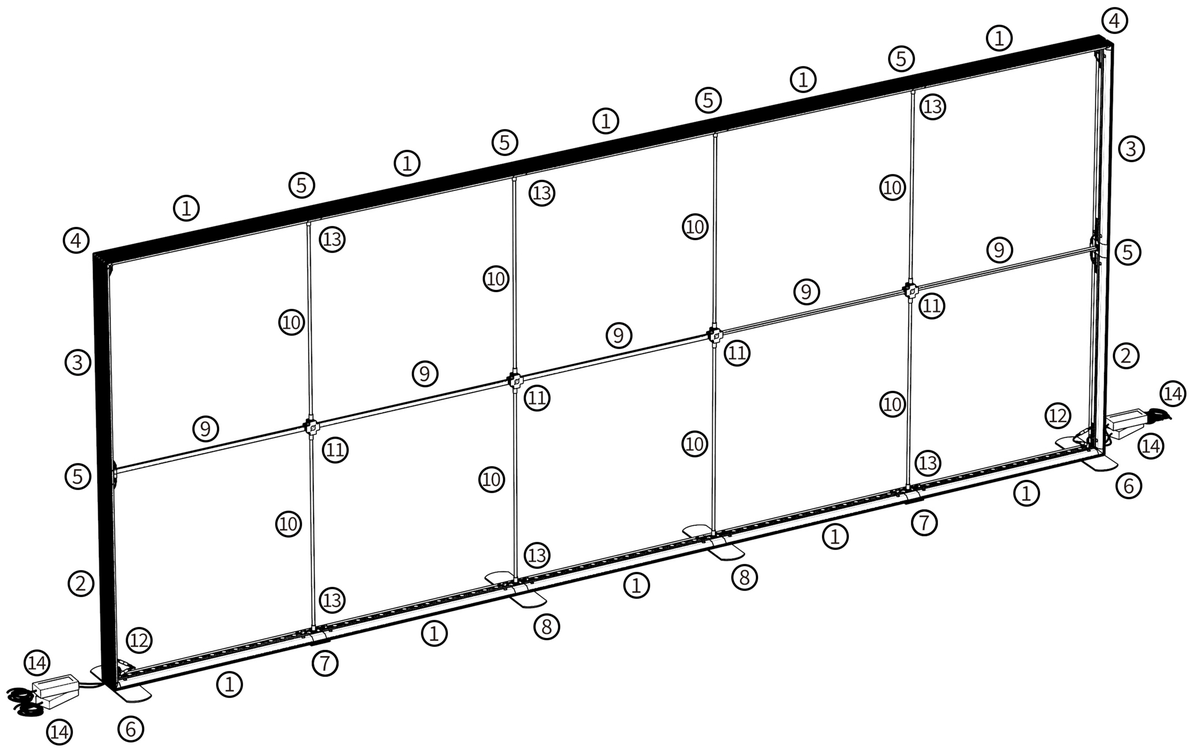

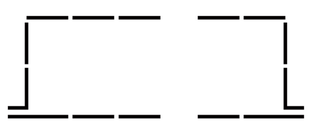

ELECTRIC
CIRCUIT LAYOUT

Module Light Box

①

Horizontal Profile x 10

② 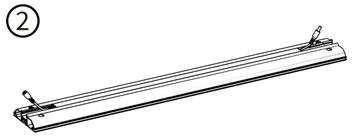

Extrusion for female & male connecting wire x 2

③

Extrusion for double male connecting wire x 2

④

Corner Part x 2

⑤ 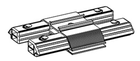

Cornnector Part x 6

⑥ 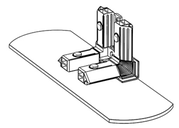

Base Foot x 2

⑦ 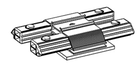

Base Foot x 2
Using For Big Size

⑧ 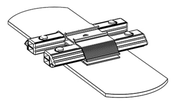

Base Foot x 2
Using For Big Size

⑨

Support Pole x 5

⑩ 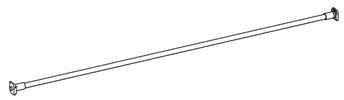

Round Shape Support Pole x 8

⑪

Cross Part x 4

⑫

Double Female Connecting Wire x 2

⑬

Double Male Connecting Wire x 6

⑭ 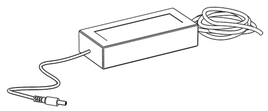

Power Supply x 4

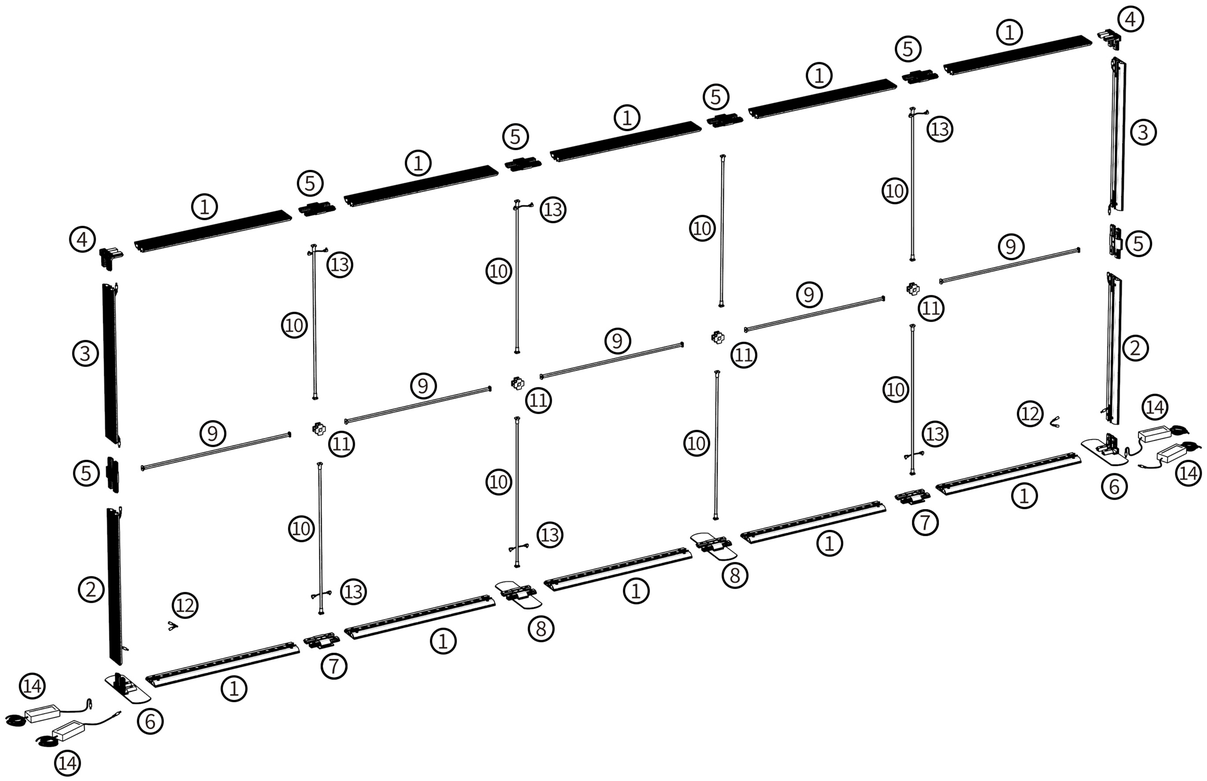

1

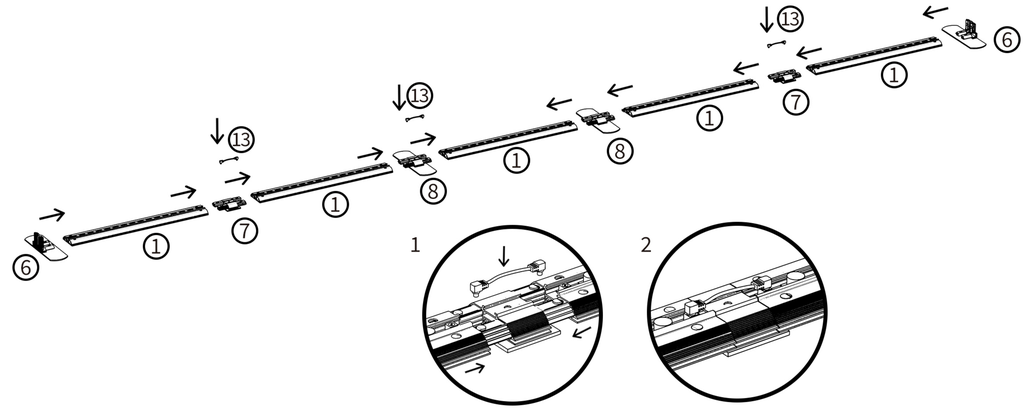

2

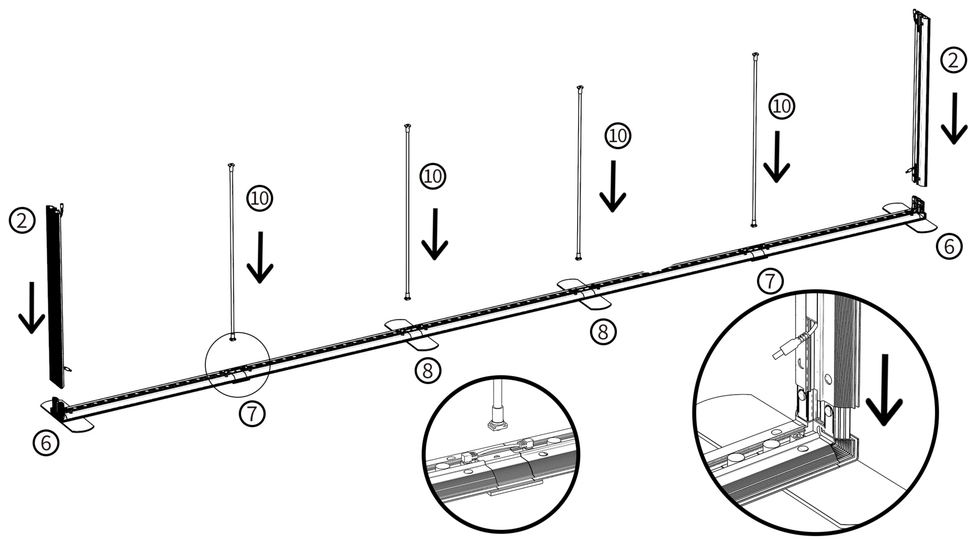

3

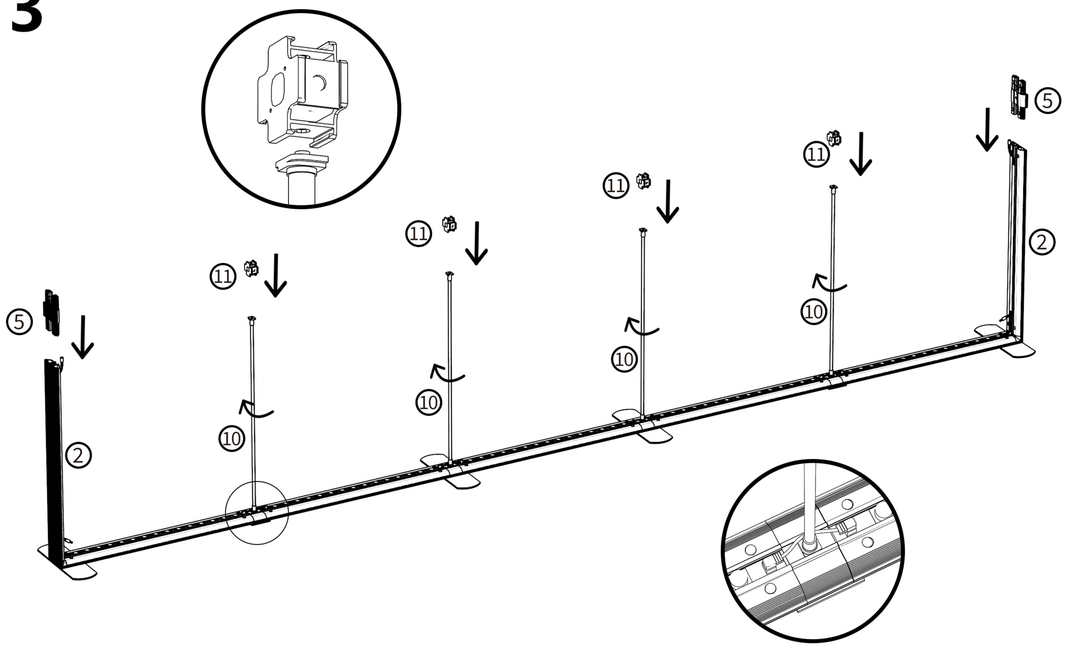
5
2
11
10
11
10
11
10
11
10
5
2

4

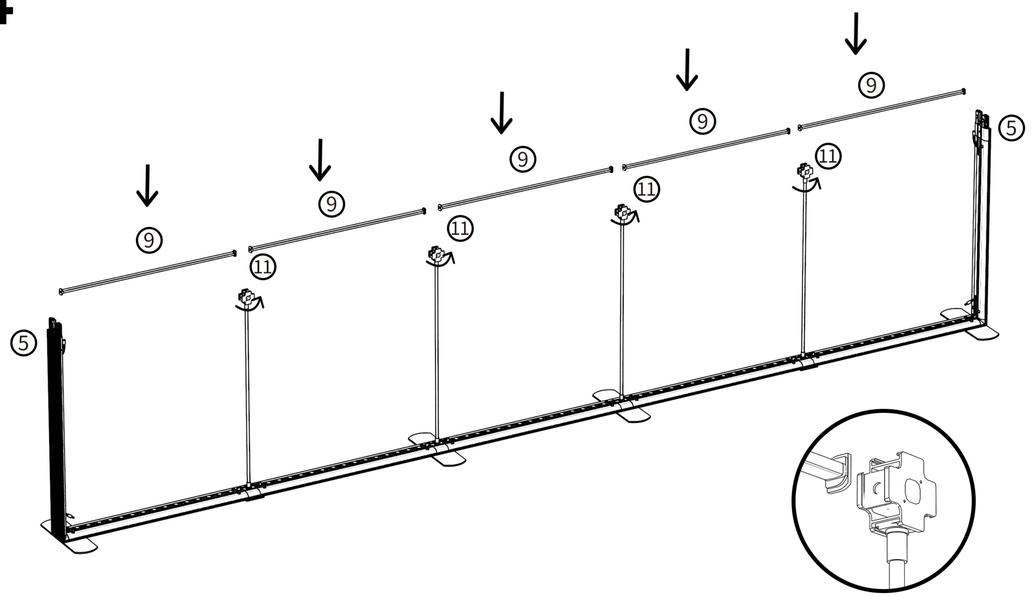
9
9
9
9
9
11
11
11
11
11
5
5

5

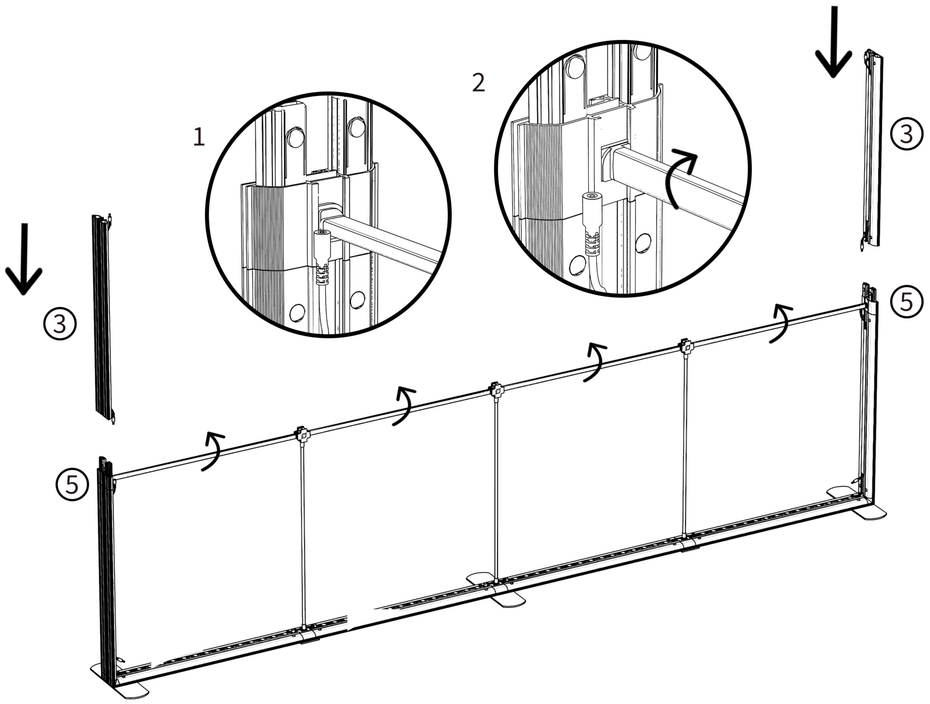
1
2
3
3
5
5

6

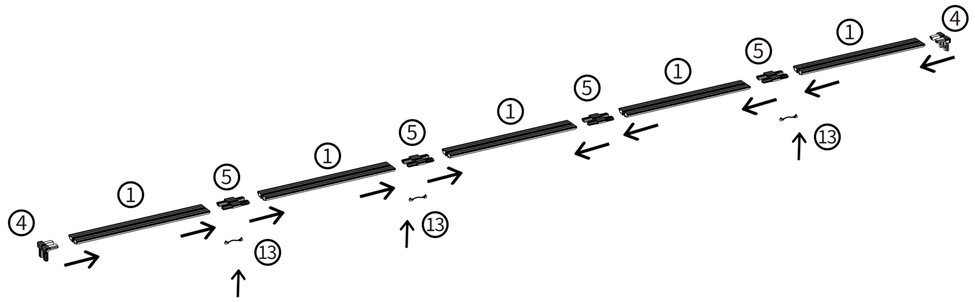
4
1
5
1
13
5
1
13
5
1
13
5
1
4

7

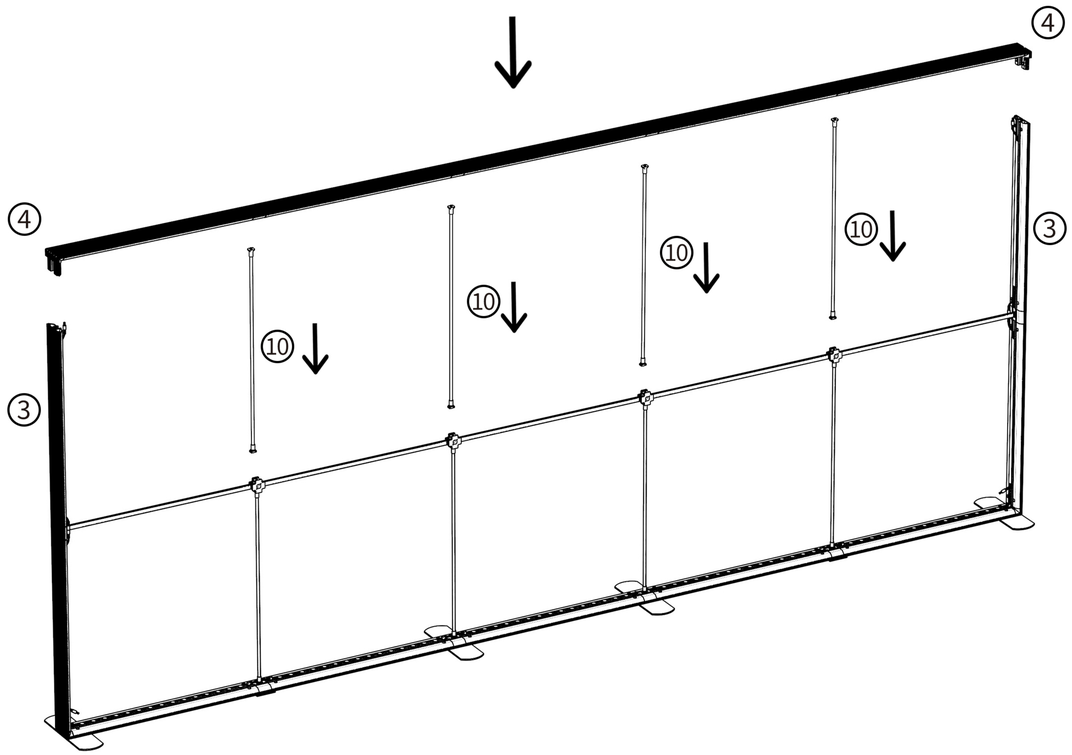
4
4
3
3
10
10
10
10
10

8

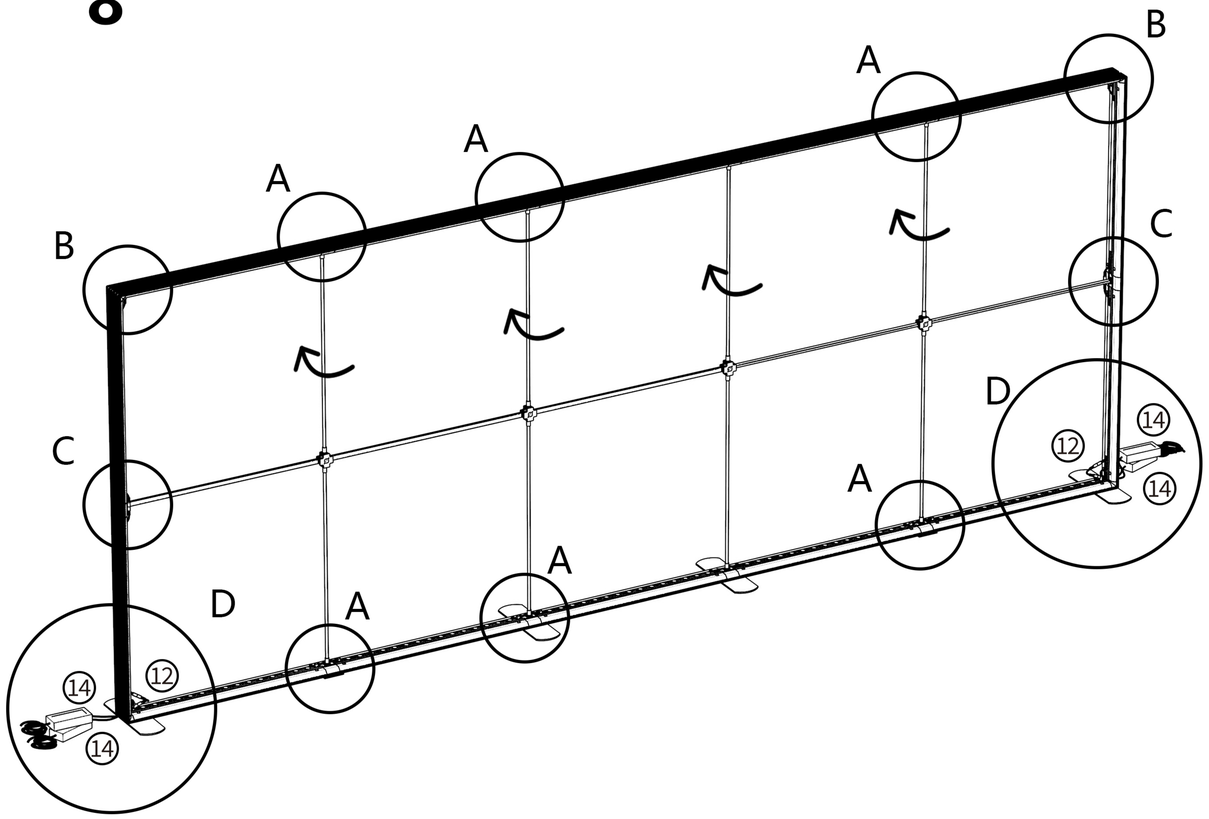
A
A
A
A
A
A
B
B
C
C
D
D
12
12
14
14
14
14

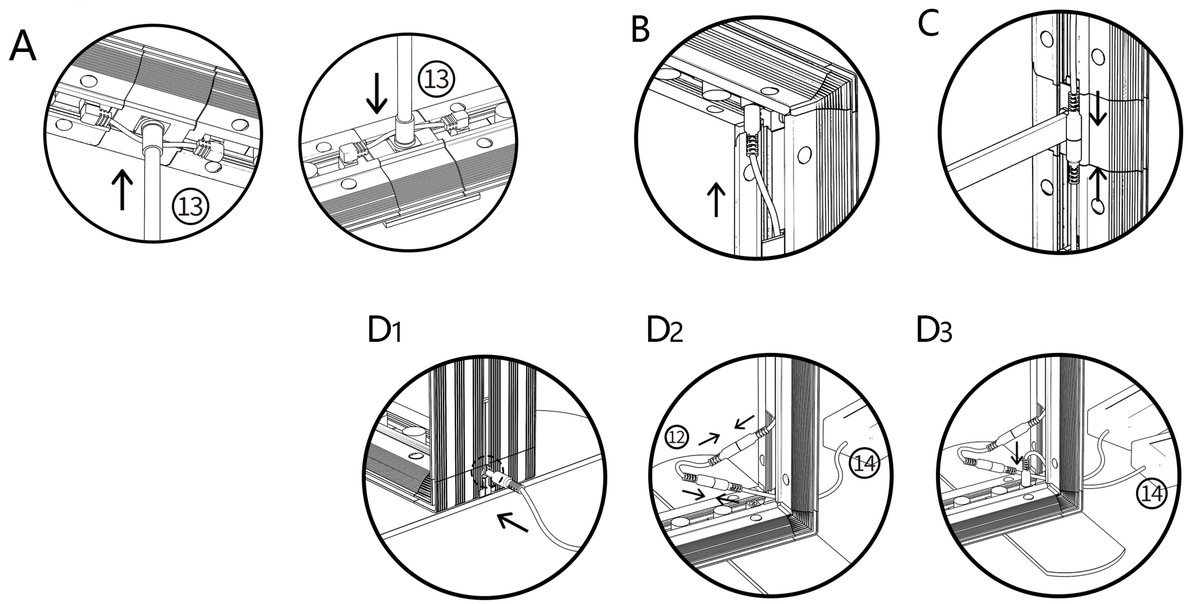
A
13
13
B
C
D1
D2
D3
12
14
14
14

4500/4850/5000X2500(1000+1000+500)

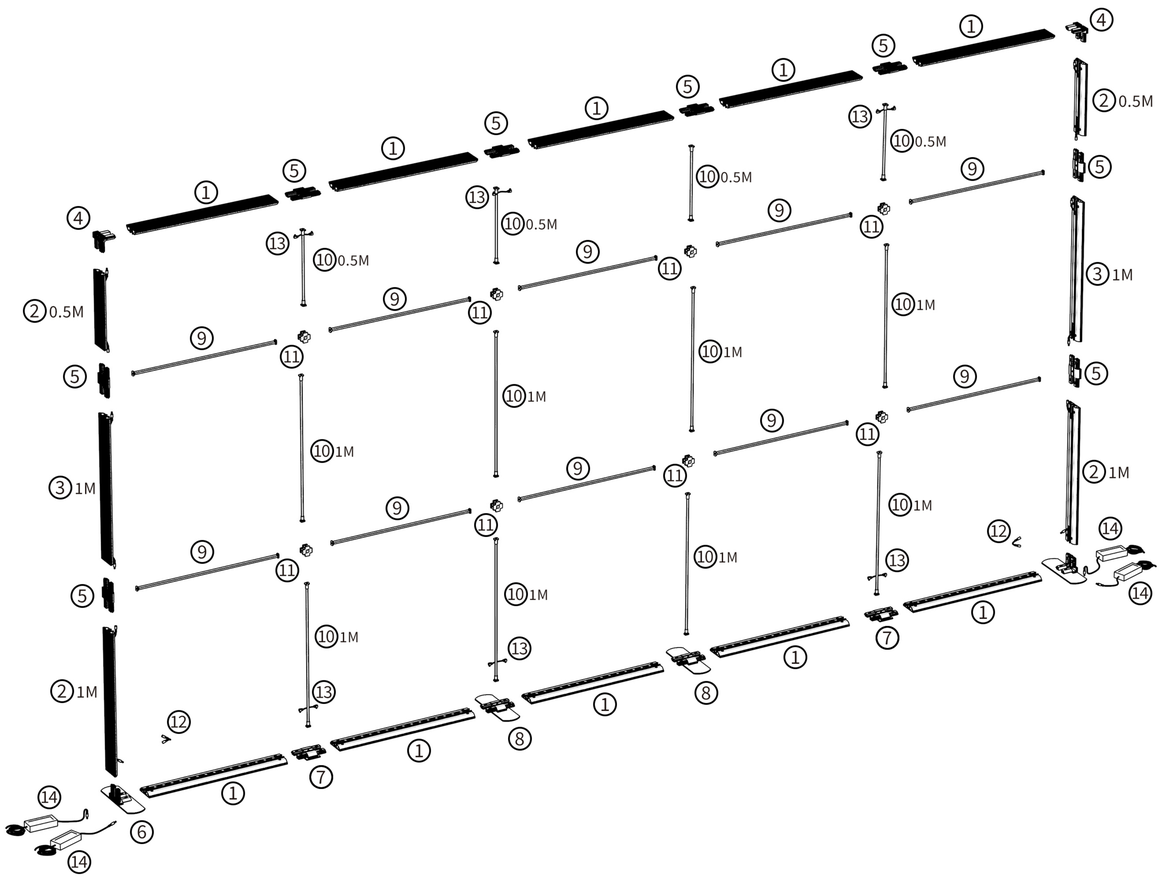

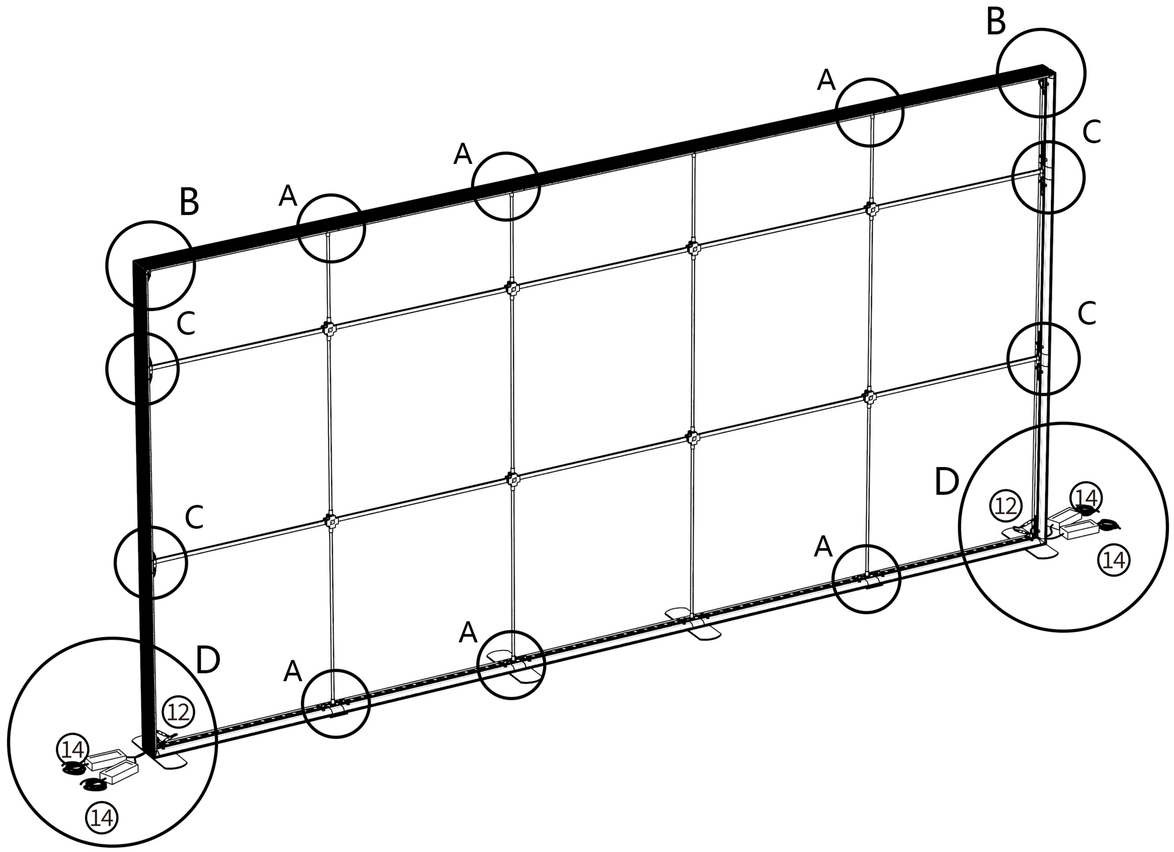

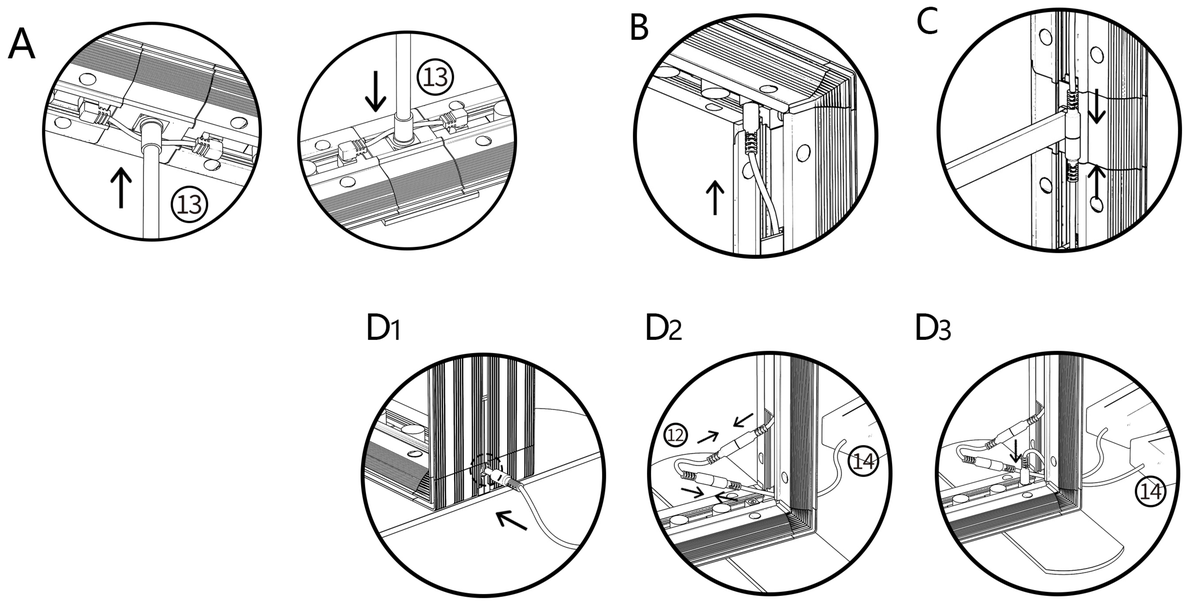

5500/5850/6000X1500(1000+500)
5500/5850/6000X2000(1000+1000)
5500/5850/6000X2250(1250+1000)
5500/5850/6000X2500(1250+1250)

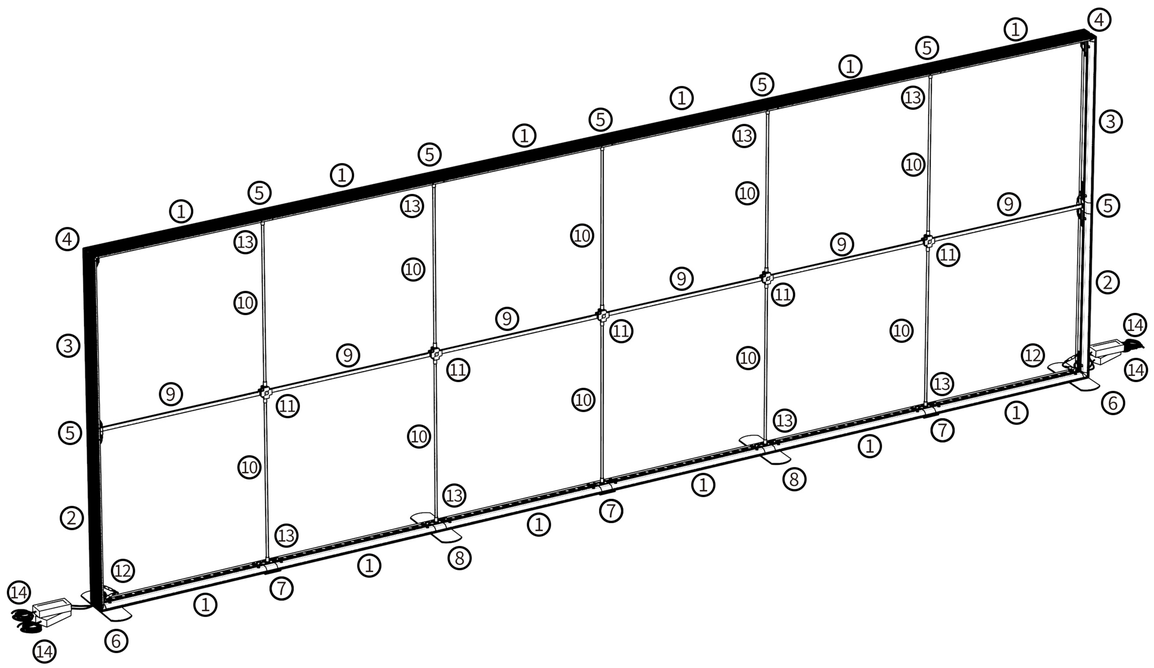

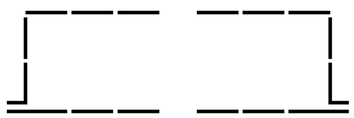

ELECTRIC
CIRCUIT LAYOUT

Module Light Box

①

Horizontal Profile x 12

② 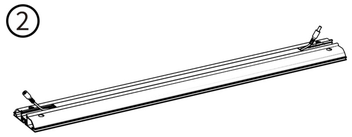

Extrusion for female & male connecting wire x 2

③

Extrusion for double male connecting wire x 2

④

Corner Part x 2

⑤ 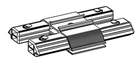

Cornnector Part x 7

⑥ 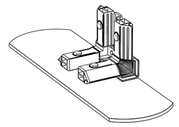

Base Foot x 2

⑦ 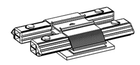

Base Foot x 3
Using For Big Size

⑧ 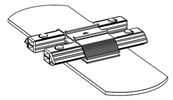

Base Foot x 2
Using For Big Size

⑨

Support Pole x 6

⑩ 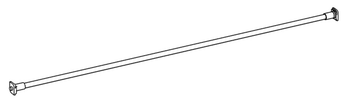

Round Shape Support Pole x 10

⑪

Cross Part x 5

⑫

Double Female Connecting Wire x 2

⑬

Double Male Connecting Wire x 8

⑭ 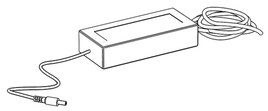

Power Supply x 4

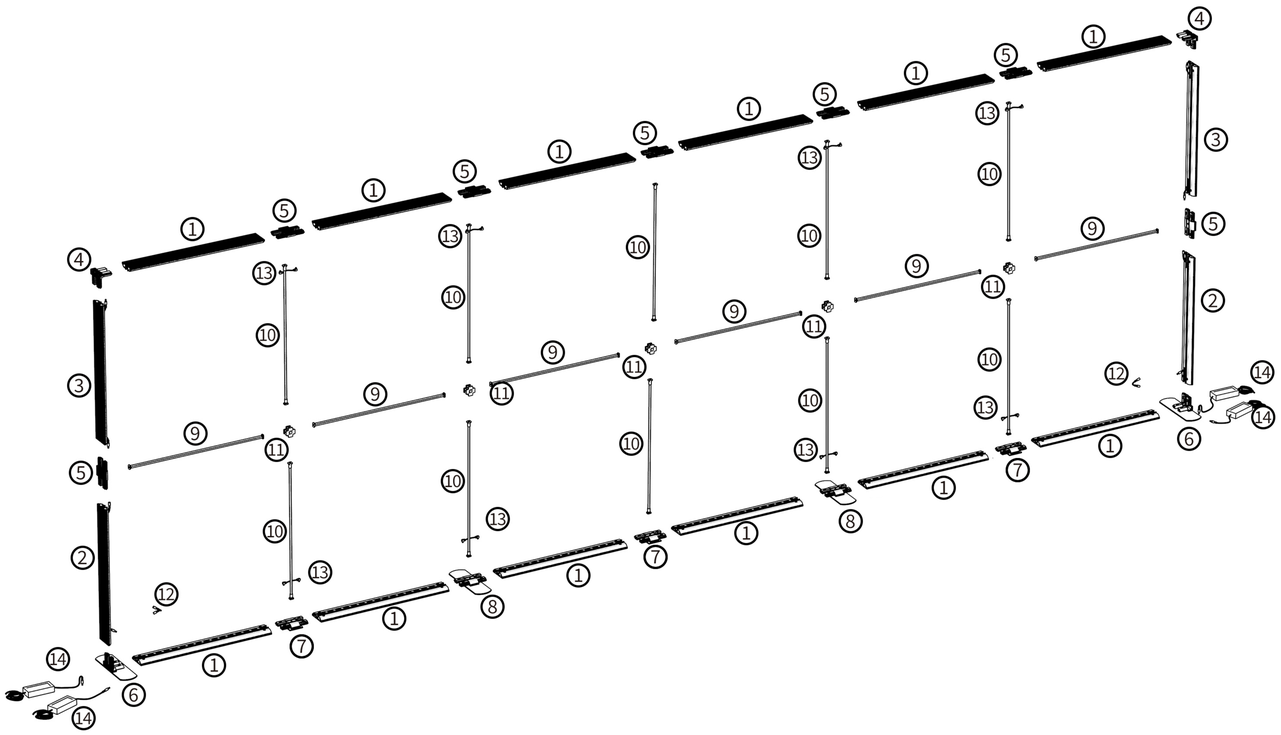

1

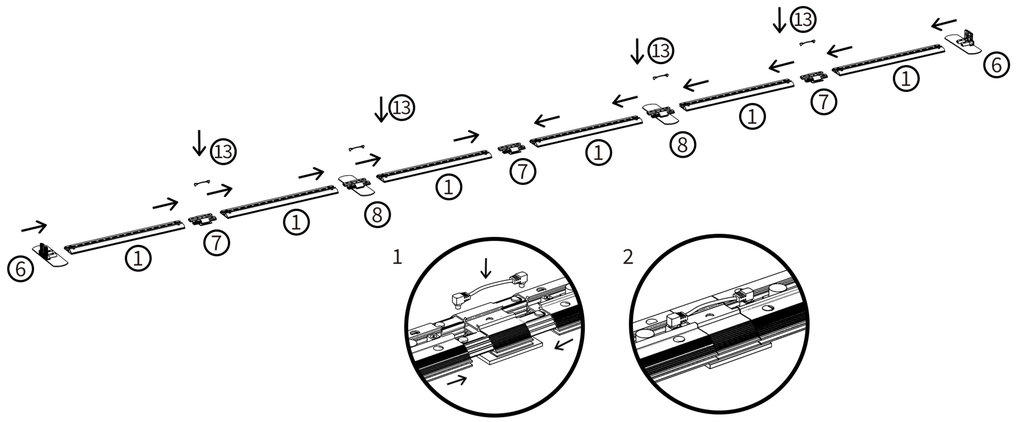

2

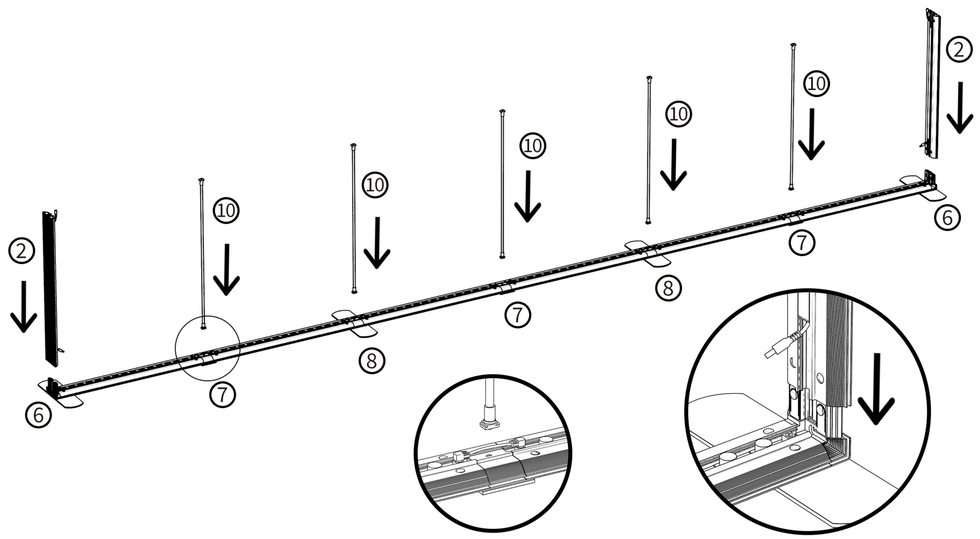

3

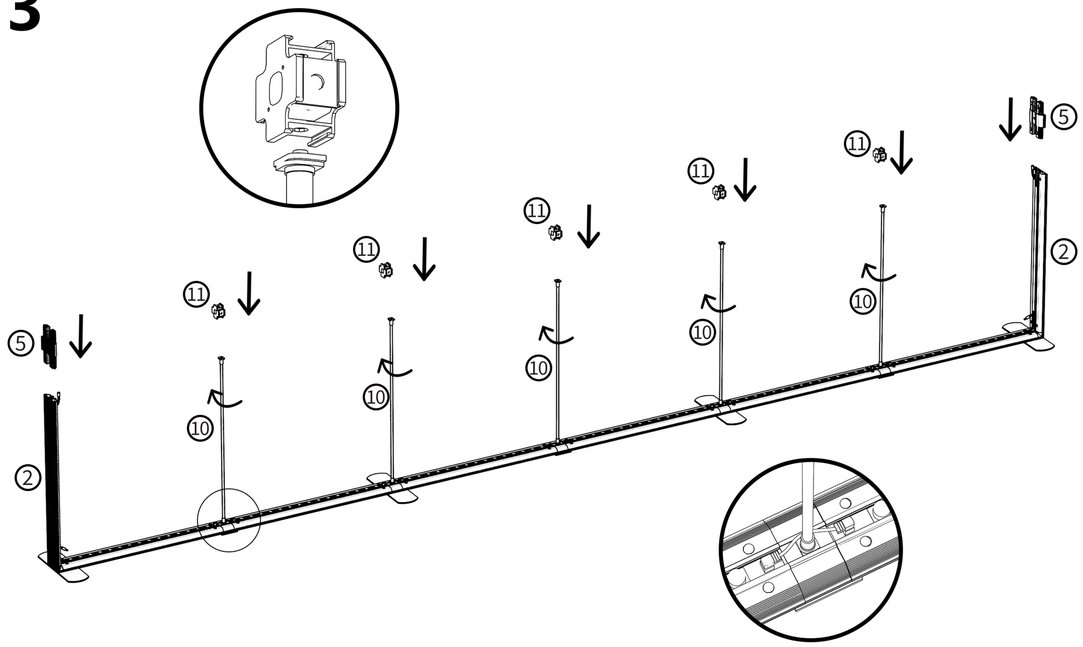

4

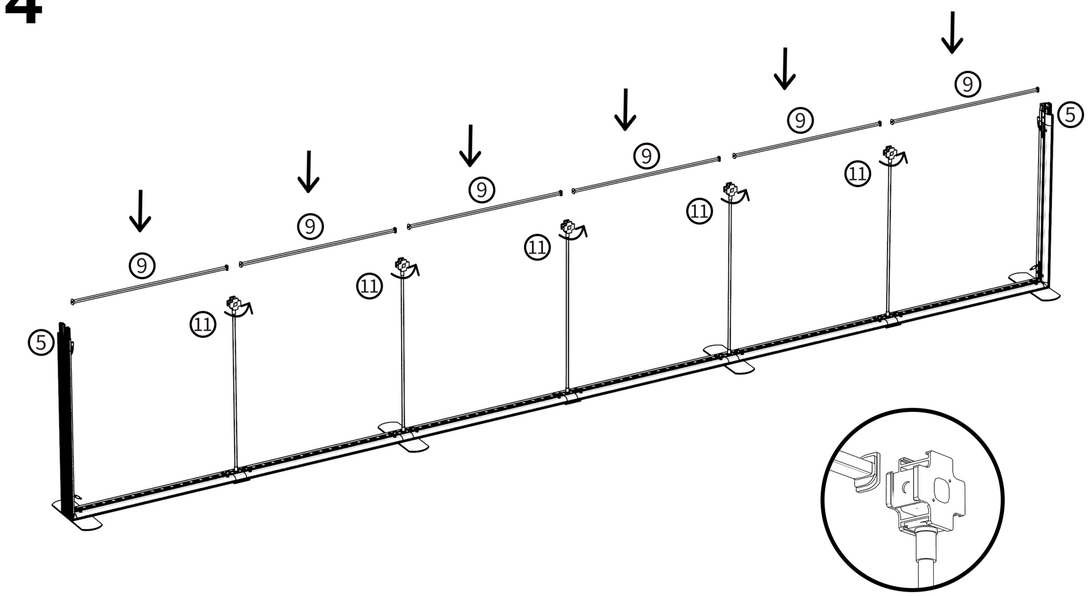

5

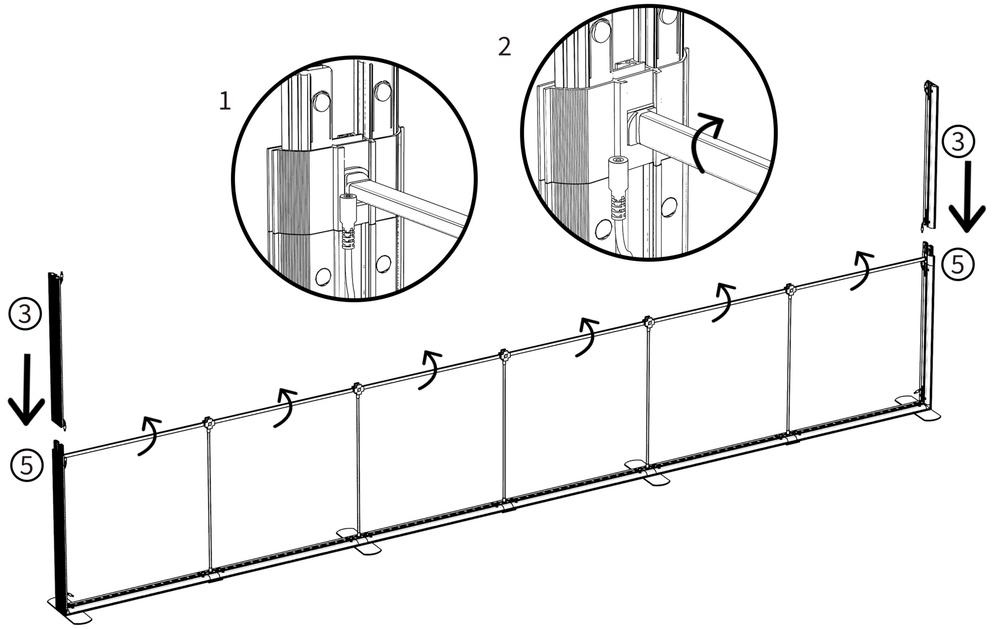

6

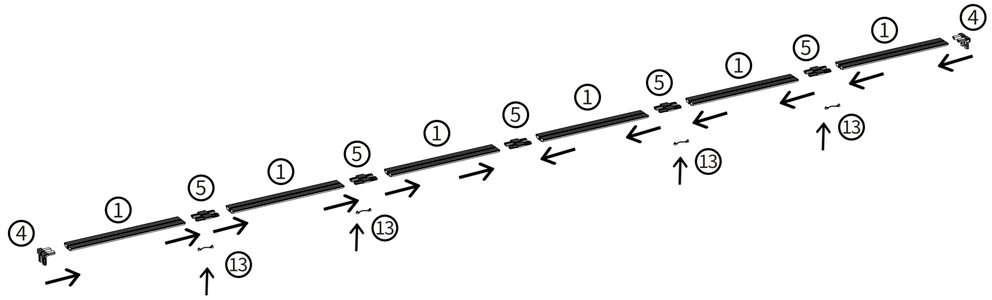

7

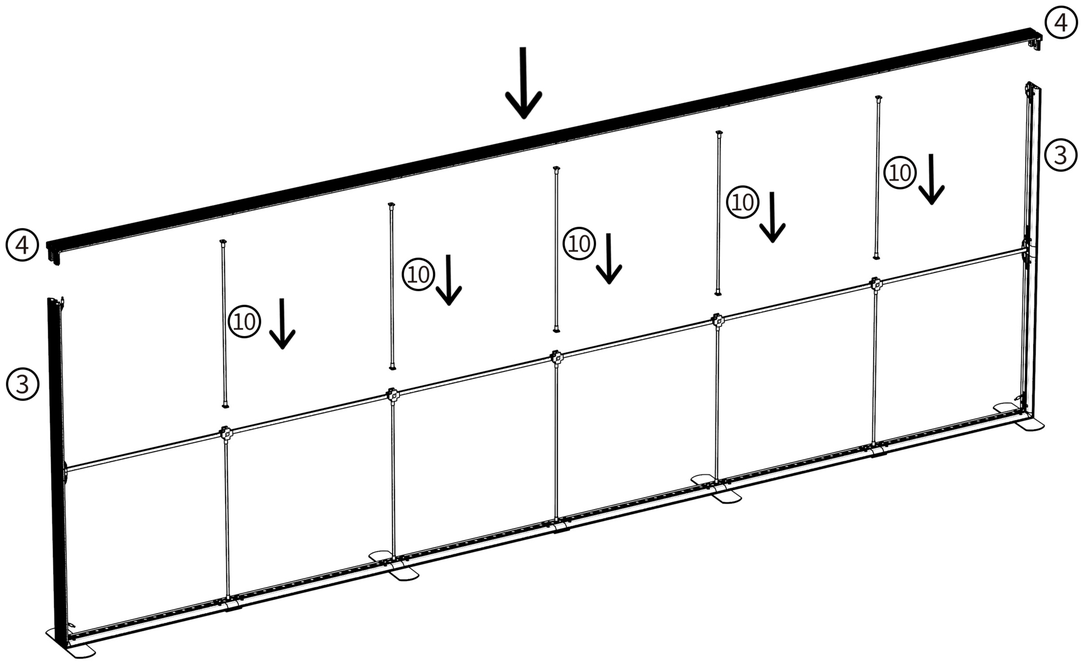
4
4
3
3
10
10
10
10
10
10

8

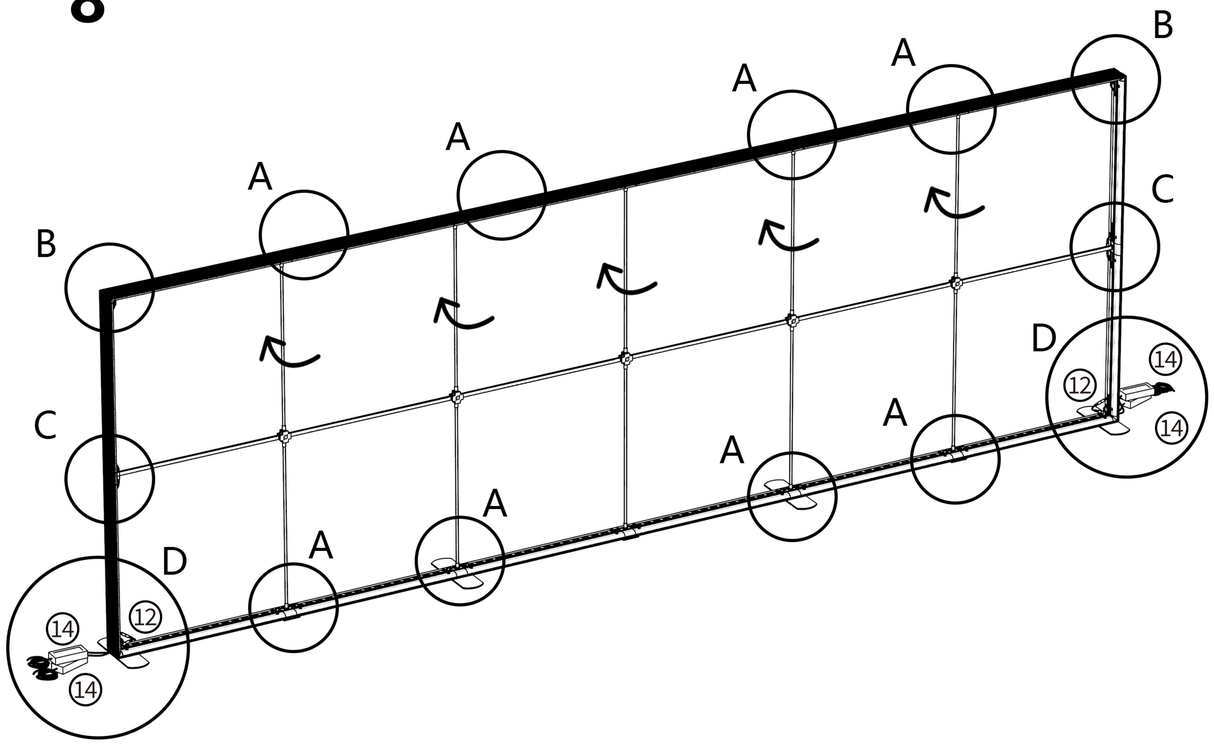
A
A
A
A
A
B
B
C
C
D
D
A
A
A
A
12
12
14
14
14
14

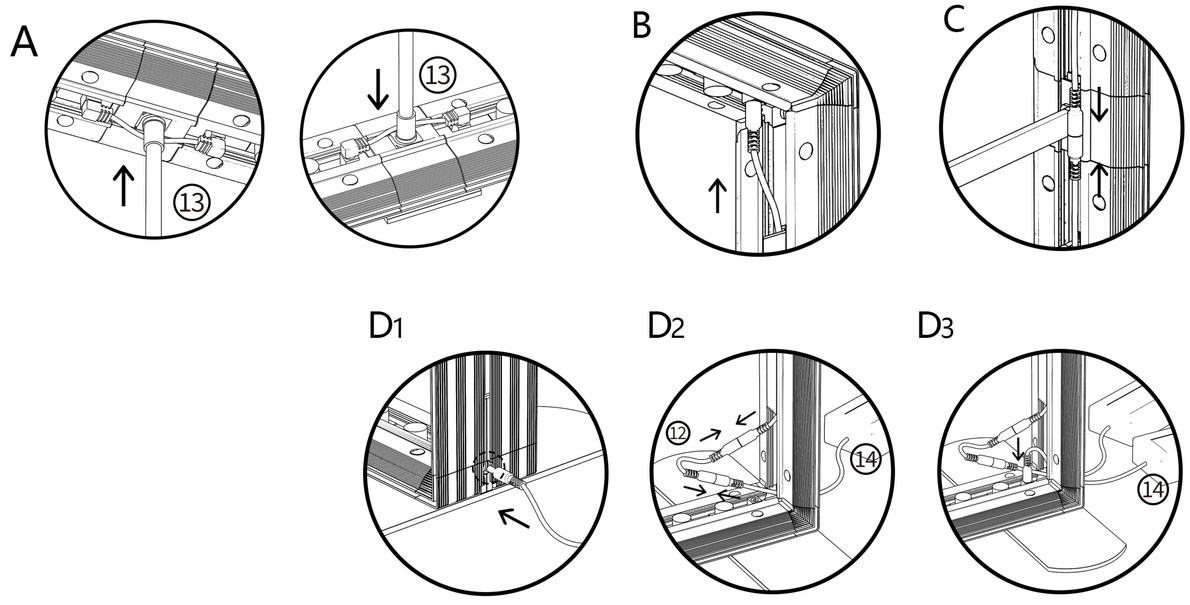
A
13
13
B
C
D1
D2
D3
12
14
14
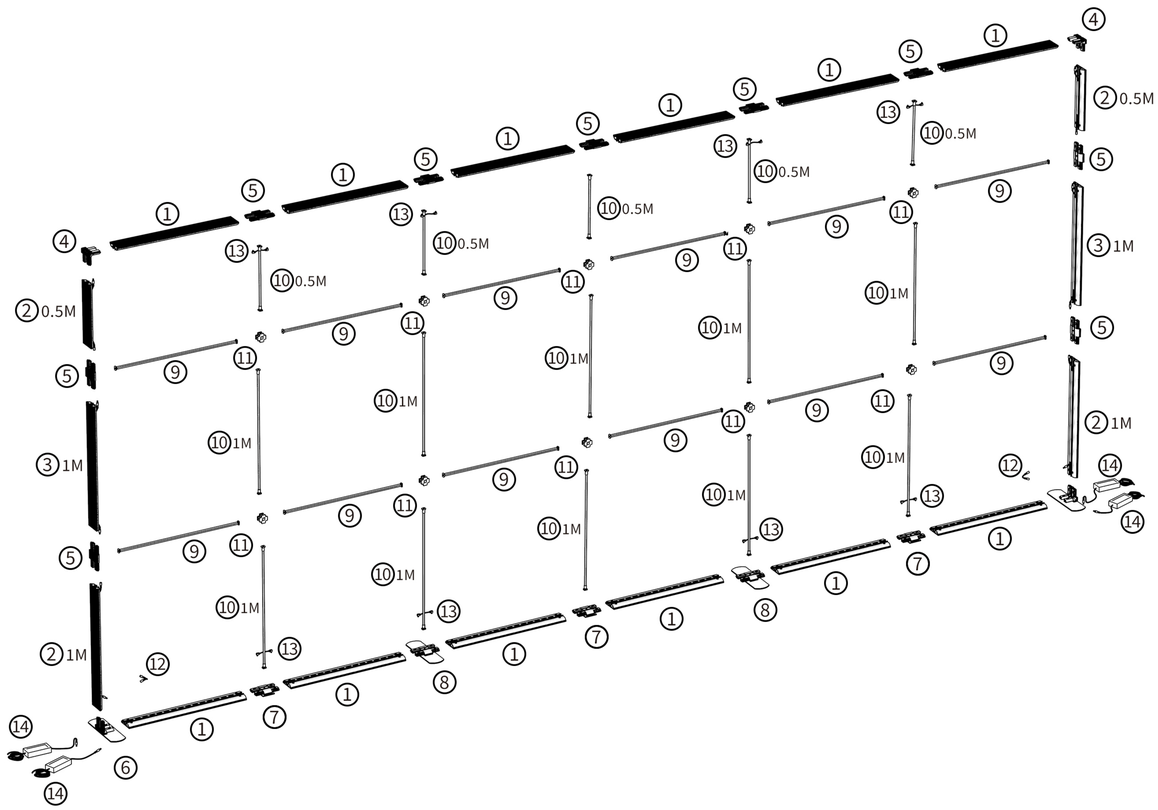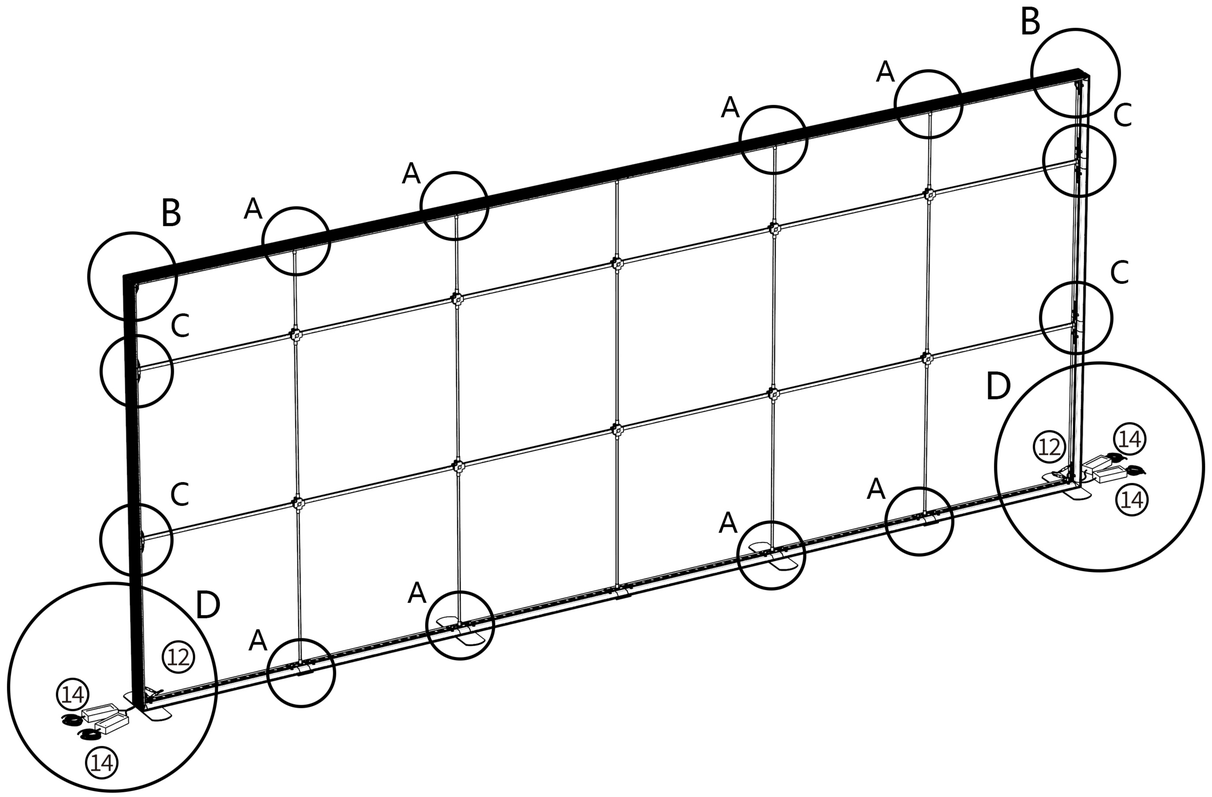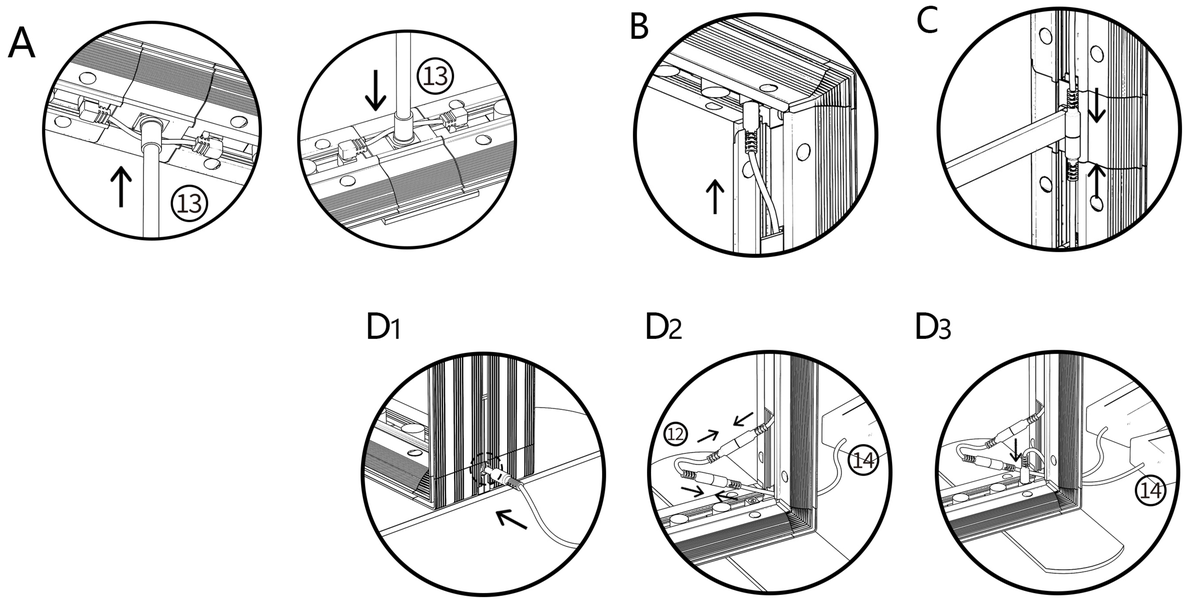
5500/5850/6000X2500(1000+1000+500)