T9-GA02-W PLUS

Dimensions

Unit: mm

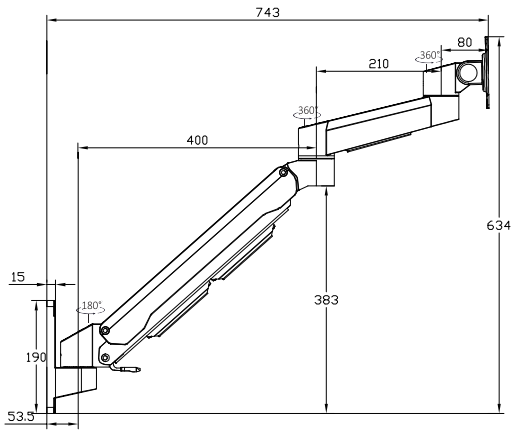

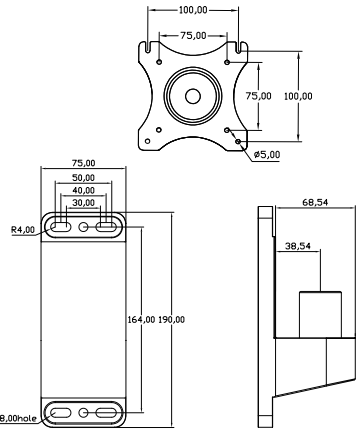

PRODUCT NO：T9-GA01-W PLUS KG ≤15kg

VESA	Tilt	Rotate	Swivel
100x100 75x75mm 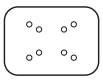			

Cable Management	Air Pressure Rise and Fall	Quick Installation Design
	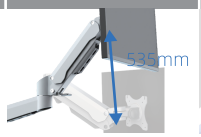	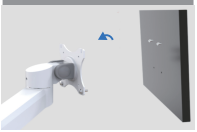

Specifications

Complete System	Net Weight		≈5.5kg (≈12.13lbs)
	Colour		Black/White/Silver
	Material		Plastic/Aluminum
Display System	Hinge Module	Swivel (VESA Hinge)	±90°
		Tilt (VESA Hinge)	-15° ~ + 35°
		Pivot	360°
		User Torque Adjust	Available
	Display Support	Mounting Pattern	100x100 / 75x75 mm
		Display Type	Singal Monitor
		Panel Size Support	≤32"
		Support Weight (VESA)	≤15kg (≤33lbs)
	Height Adjust	Height Adjustment Range (Arm)	535mm(21.06")
		Tension Torque Adjust	Yes
	Extended ArmProvided		2
	Cable Management		Yes

Ordering Information

Product No.	Product Description
T9-GA01-W PLUS（Color Remarks）	WallArm, patented VESA,,support 32",≤15kg,75x75 / 100 x 100 mm

All product specifications are subject to change without notice

Last updated: 13-Apr-2025