瑞安市木森机械有限公司
地址：瑞安市南滨街道林郑路12-A号
销售热线：13967780382
电话：0577-65591142
E-mail: Evawong@aliyun.com
WWW.MOSUNMACHINE.COM

RUIAN MOSUN MACHINERY CO.,LTD
Add:12-A Lingzheng Road Linyang, Nabin Street,
Ruian City, Zhejiang,China
Mobile: +86-13967780382
Tel: +86-577-65591142
E-mail: Evawong@aliyun.com
WWW.MOSUNMACHINE.COM

2024
PRODUCT
BROCHURE

SLITTING AND REWINDING MACHINE
SHEET CUTTING MACHINE
CROSS CUTTING MACHINE

SERIES PRODUCT

不断钻研打磨

专注更多细节

Constantly Study And Polish
To Focus On More Details

自主研发

- 强大的自主研发能力， 高精尖的技术，研究挖掘产品的每一个细节，实效加稳定，让设计日臻完善，功能更加强大。
- Strong independent research and development capabilities, high-precision technology, research and excavate every detail of the product, the actual effect and stability, make the design more perfect and more powerful.

标准化

- 以质量管理体系认证的要求，选择合格的供应商；以切纸机械零件制作标准，确定零件制作的标准。
- According to the requirements of quality management system certification, select qualified suppliers; use paper cutting machine parts production standards to determine the standards for parts production.

MSKFQ系列

分切机(淋膜纸、铝箔纸)

Slitting And Rewinding (Coated Paper, Aluminium Foil Paper)

型号 Model	MSKFQ-1300	MSKFQ-1600	MSKFQ-1800	MSKFQ-2000
最大放卷宽度 Maximum width of unwinding	1300mm	1600mm	1800mm	2000mm
最大放卷直径 Maximum diameter of unwinding	Φ1700mm	Φ1700mm	Φ1700mm	Φ1700mm
最小分切宽度 Minimum width of slitting	40mm	40mm	40mm	40mm
最大收卷直径 Maximum diameter of winding	Φ1300mm	Φ1300mm	Φ1300mm	Φ1300mm
分切速度 Speed of slitting	≤400m/min	≤400m/min	≤400m/min	≤400m/min
功率与电源 Power supply	380V/50hz 56kw	380V/50hz 56kw	380V/50hz 60kw	380V/50hz 67kw
尺寸与重量 Size and weight	13000kg 8500x3250x2700mm	14000kg 8500x3550x2700mm	15000kg 8500x3750x2700mm	15900kg 8500x4050x2700mm

产品应用 Application

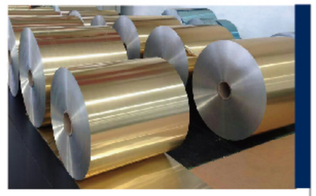

使用范围与性能
Range Of Use And Performance

本机为框架式全自动电脑高速分切机，适用于各种超大型卷筒材料，如淋膜纸、无碳纸、白卡纸、烟包纸、牛皮纸、无纺布、铝箔、不干胶材料、PVC 塑料等卷材的分切和复卷等。主机采用三电机伺服控制，保持加速中平衡运转。自动计米报警功能。收卷采用前后 A、B 气胀轴结构，采用直线导轨自动卸料。放卷采用超声波 /CCD 自动纠偏修正系统，使不规则材料能正常分切。废边采用高压风机自动吸风碎纸排除。放卷采用液压无轴式自动上料装置。该机采用 PLC 触摸屏控制，自动锥度张力，中心表面卷取。

This machine is used for slitting and rewinding various large rolling materials, such as kraft paper, cellophane paper, bill paper nonwovens,aluminum foil, adhesive, etc.Frequency converter three motors servo control, keeping speedup and stable operation. It has the functions of automatic counting meters, automatic alarm, etc. With A, B air expanding shaft structures for rewinding.Adopt web edge automatic correction system,well slitting irregular edge roll material.Equipped with automatic waste paper edge blowing out device.Automatic material loading by hydraulic system for unwinding.This machine use PLC controller, automatic taper tension, central surface rewinding.

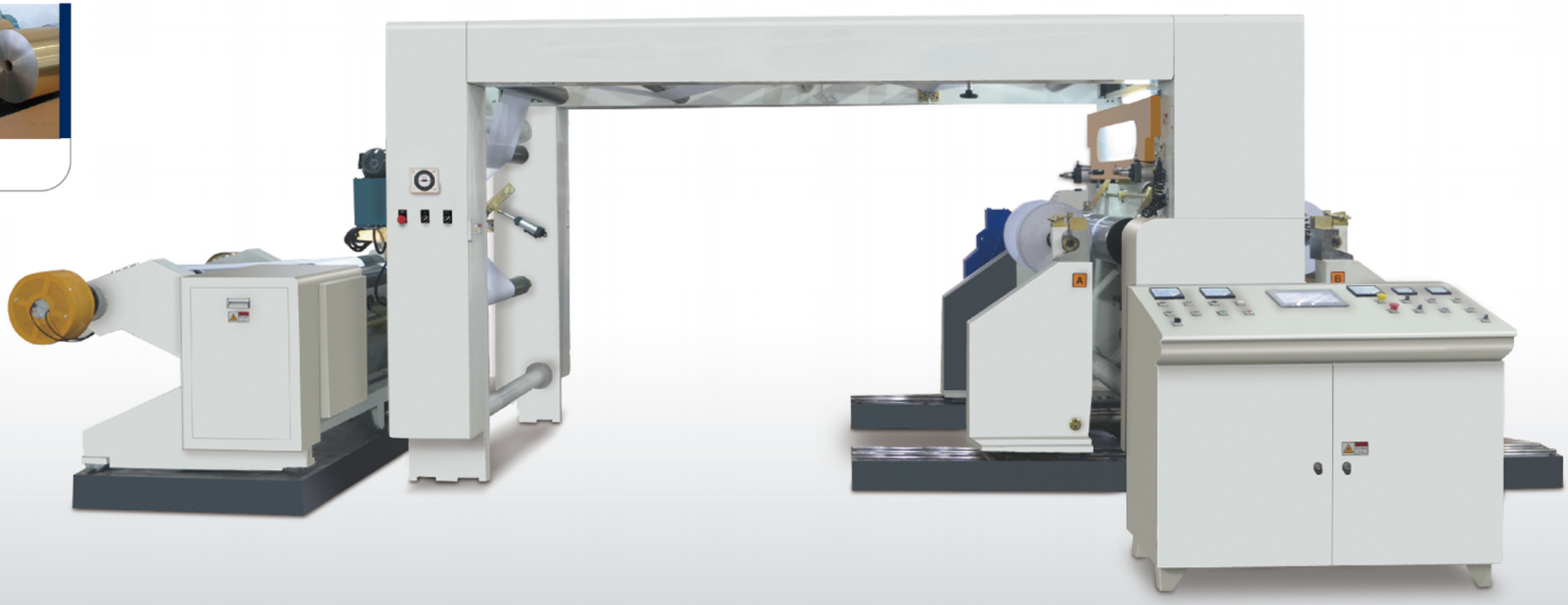

MSCM系列

分切机(不干胶、复合材料)

Slitting And Rewinding (Adhesive, Composite Materials)

使用范围与性能
Range Of Use And Performance

本机为高速电脑分切机，适用于对各种卷筒材料的分切、 如不干胶材料、薄膜 PVC、PET、型纸、透气膜、珠光膜类等分切和复卷。该机采用三电机伺服同步控制、 自动张力控制系统， 中心卷取方式，本机采用电机变频调速电机，保持加速中平稳运转 PLC 自动计米、 报警等功能； 收卷采用 A、 B 滑差轴结构。放卷采用超声波 /CCD 纠边方式。圆刀 / 平刀纵切废边自动排放装置。气动式自动上料架结构（无轴上料架结构）。配置装卸塔，卸料简单方便。

This machine is suitable for slitting and rewinding various reel materials, such as self-adhesive materials, film PVC, PET, shaped paper, breathable film, pearlescent film, etc. The machine adopts three servo motors synchronous control、automatic tension,central surface rewinding.The machine adjust speed frequency converter motor,it can keep stable operation when speed up.PLC automatic meter counting, alarm and other functions; The winding adopts A and B differential chaft structure.Unwinding adopts ultrasonic/CD edge correction method.Automatic discharge device of round/razor knife longitudinal cutting waste edge. Pneumatic automatic loading rack structure (shaftless loading rack structure) .Equipped with unloading rack, easy and convenient unloading.

型号 Model	MSCM-1300	MSCM-1300
最大放卷宽幅 Maximum width of unwinding	1300mm	1700mm
最大放卷直径 Maximum diameter of unwinding	Φ1800mm	Φ1800mm
最小分切宽度 Minimum width of slitting	30mm	30mm
最大收卷直径 Maximum diameter of winding	Φ800mm	Φ800mm
分切速度 Speed of slitting	400m/min	400m/min
功率与电源 Power supply	380V 38kw	380V 41kw
尺寸与重量 Size and weight	8700kg 4400x5500x2200mm	9000kg 4400x5900x2200mm

MSMBC系列

分切机(吸管纸、纸塑复合材料)

Cutting Machine (Straw Paper, Paper Plastic Composite Materials)

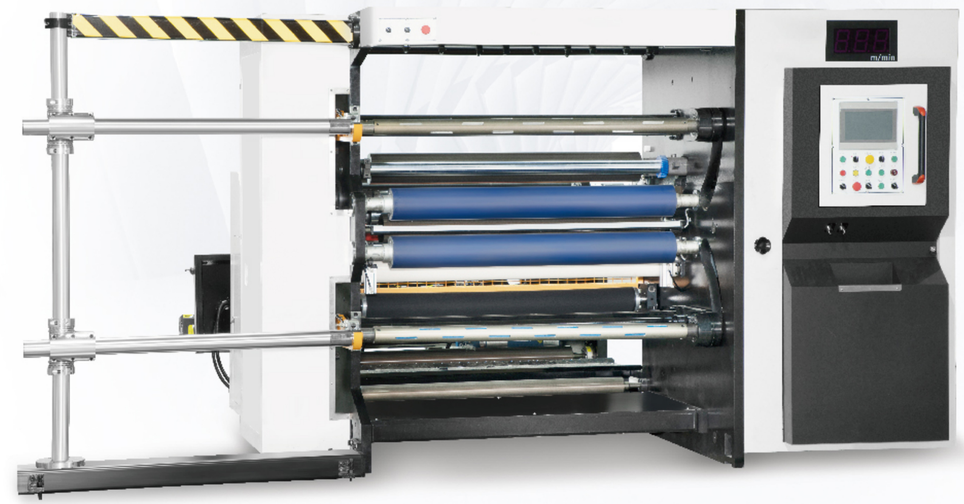

使用范围与性能
Range Of Use And Performance

该机为表面收卷分切机， 主要用于各种礼品纸、墙纸、防水材料等装饰材料的复卷。主电机采用三伺服电机 ， 配置变频调速。放卷采用超声波 /CCD 纠偏， 收卷采用双伺服电机控制， 中心卷取与表面接触并用， AB 双轴交叉收卷， 永不咬口。采用 PLC 自动计米、 报警停机等功能。圆刀 / 平刀分切方式， 高压风机废边自动排出。

This machine is mainly used for all kinds of gift paper, wall paper, waterproof materials and other decorative materials of rewinding.This machine adopts three servo motorscontrol and automatic taper tension,central surface rewinding.Frequency converter control motors,running smoothly in acceleration.The unwinder adopts the automatic ultrasonsic correction, The winding adoptsA. B air shaft, two magnetic powder control (or choose servo motor).1t adopts PLC autometer count,automatic alarm.Circular /razor knife cut the materials.The waste edge uses high pressure air blower to discharge.

型号 Model	MSMBC-1300	MSMBC-1600
最大放卷宽幅 Maximum width of unwinding	1300mm	1600mm
最大放卷直径 Maximum diameter of unwinding	Φ1400mm	Φ1400mm
最小分切宽度 Minimum width of slitting	10mm	10mm
最大收卷直径 Maximum diameter of winding	Φ600mm	Φ600mm
分切速度 Speed of slitting	500m/min	500m/min
功率与电源 Power supply	380V 30kw	380V 30kw
尺寸与重量 Size and weight	5800kg 4200x3600x2100mm	6000kg 4200x3900x2100mm

MSFQM系列

分切机(Bopp/PET、印刷膜)

Slitting And Rewinding (Bopp/PET, Printed)

使用范围与性能
Range Of Use And Performance

本机为电脑高速分切机， 适用于对各种卷筒材料的分切， 如不干胶材料、薄膜 PVC、PET、型纸、透气膜、珠光膜等分切和复卷。该机采用三伺服电机同步控制、 自动张力控制系统， 中心卷取方式．本机采用电机变频调速电机，保持加速中平稳运转 .PLC 自动计米、 报警等功能； 收卷采用 A、 B 滑差轴结构放卷采用超声波式 /CCD 纠边方式．圆刀 / 平刀纵切废边自动排放装置气动式自动上料架结构（无轴上料架结构），配置装卸塔，卸料简单方便。

Machine suitable many kinds of jumbo roll materials,such as adhesive stickers/PVC/PET/Release paper/breathable film/Pearlized BOPP. The machine adopts three servo motors synchronous control automatic tension,central surface rewinding.The machine use frequency converter adjust speed motor,it keeps stable operation when speedup.It adopts PLC autometer count,automatic alarm;The rewinding adopts A、B slip shaft structures(Air shaft can be choosed).The unwinding adopts ultrasonic correcting edge position.Circular / razor knife cut the materials.The waste edge uses high pressure air blower to discharge.Hydraulic shaftless loading structure.Loading rock,material unloading convenience.

型号 Model	MSFQM-1300
最大放卷宽幅 Maximum width of unwinding	1300mm
最大放卷直径 Maximum diameter of unwinding	Φ800mm
最小分切宽度 Minimum width of slitting	25mm
分切速度 Slitting speed	600m/min
最大收卷直径 Maximum diameter of winding	Φ600mm
整机功率 Total power	28kw
尺寸与重量 Size and weight	4800kg 4400x2200x2000mm

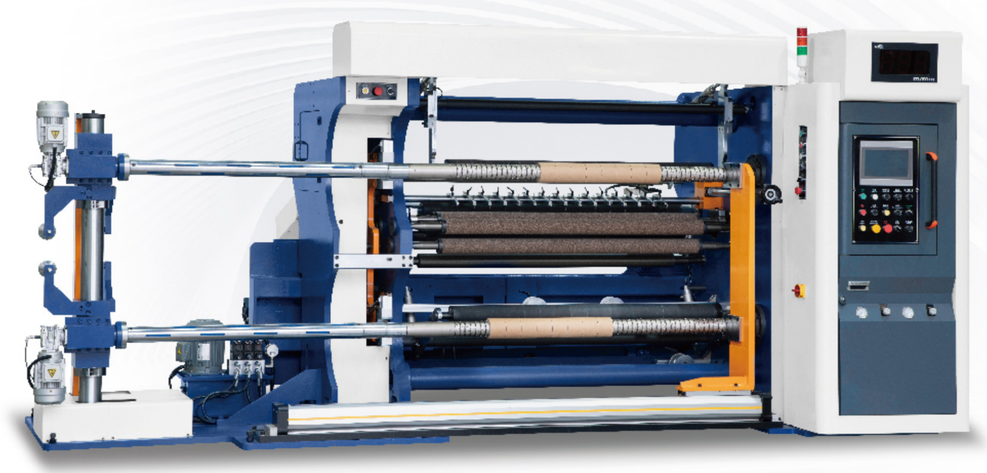

MSFQFJ系列

分切复卷机(淋膜纸、涂硅纸)

Slitting And Rewinding (Coated Paper, Silicon Coated Paper)

机器侧面 Machine side

使用范围与性能
Range Of Use And Performance

本机适用于各种超大型卷材的分切和复卷， 如 20g/m -400g/m 牛皮纸、白卡纸、淋膜纸、硅油纸、铝箔、锡纸、PVC 薄膜、无纺布材料等卷材。该机采用三伺服电机控制，自动锥度张力， 中心卷取方式。主机采用变频调速， 保持加速中平衡运转。自动计米、 报警等功能。收卷采用单气胀轴结构， 链条。自动卸料、 操作方便。放卷采用超声波 /CCD 纠偏修正系统， 使不规则材料能正常分切。采用圆刀 / 平刀纵切的分切方式， 高压风机废边自动排除装置。气胀轴自动上料方式 / 液压无轴自动放卷装置。

Machine suitable many kinds of jumbo roll materials,such as adhesive stickers/PVC/-PET/Release paper/breathable film/Pearlized BOPP.1.This machine adopts PLC (Siemes)/Servo motor control and automatic taper tension,central surface rewinding.-Frequency control of motor,run smoothly in acceleration.It has the functions of automatic counting meter, automatic alarm, etc. Adopt A and B pneumatic shaft structure for rewinding, chain unloading system, which is easy for unloading. It adopts ultrasonic /CCD automatic edge correction adjustment system for unwinding, anomalistic materials will be easy slit. Equipped with automatic waste film blowing device. Automatic material loading by pneumatic, matched with air.

型号 Model	MSFQFJ-1300	MSFQFJ-1600	MSFQFJ-1800
最大放卷宽幅 Maximum width of unwinding	1300mm	1600mm	1800mm
最大放卷直径 Maximum diameter of unwinding	Φ1600mm	Φ1600mm	Φ1600mm
最小分切宽度 Minimum width of slitting	80mm	80mm	80mm
最大收卷直径 Maximum diameter of winding	Φ1400mm	Φ1400mm	Φ1400mm
分切速度 Speed of slitting	≤350m/min	≤350m/min	≤350m/min
整机功率 Total power	30kw	35kw	38kw
尺寸与重量 Size and weight	5400kg 4400x3200x1650mm	5600kg 4400x3500x1650mm	5900kg 4400x3700x1650mm

MSFQA 系列

分切机(口杯纸、纸袋纸)

Slitting And Rewinding (Cup Paper, Kraft Paper)

使用范围与性能
Range Of Use And Performance

本机适用于各种超大型卷材的分切和复卷， 如 20g/m -400g/m 牛皮纸、 白卡纸、 淋膜纸、 硅油纸、铝箔、锡纸、PVC 薄膜、无纺布材料等卷材。该机采用三伺服电机控制，自动锥度张力，中心卷取方式。主机采用变频调速，保持加速中平衡运转。自动计米、报警等功能。收卷采用上下 A、B 气胀轴结构， 链条。自动卸料、操作方便。放卷采用超声波 /CCD 纠偏修正系统，使不规则材料能正常分切。采用圆刀 / 平刀纵切的分切方式，高压风机废边自动排除装置。气胀轴自动上料方式 / 液压无轴自动放卷装置。

Machine suitable many kinds of jumbo roll materials,such as adhesive stickers/PVC/PET/Release paper/breathable film/Pearlized BOPP.1.This machine adopts PLC(Siemes)/Servo motor control and automatic taper tension,central surface rewinding.Frequency control of motor,run smoothly in acceleration.It has the functions of automatic counting meter, automatic alarm, etc. Adopt A and B pneumatic shaft structure for rewinding, chain unloading system, which is easy for unloading. It adopts ultrasonic /CCD automatic edge correction adjustment system for unwinding, anomalistic materials will be easy slit. Equipped with automatic waste film blowing device. Automatic material loading by pneumatic, matched with air.

型号 Model	MSFQA-1300	MSFQA-1600	MSFQA-1800
最大放卷宽幅 Maximum width of unwinding	1300mm	1600mm	1800mm
最大放卷直径 Maximum diameter of unwinding	Φ1400mm	Φ1400mm	Φ1400mm
最小分切宽度 Minimum width of slitting	30mm	30mm	30mm
最大收卷直径 Maximum diameter of winding	Φ1000mm	Φ1000mm	Φ1000mm
分切速度 Speed of slitting	≤350m/min	≤350m/min	≤350m/min
功率与电源 Power supply	380V/50hz 24kw	380V/50hz 26kw	380V/50hz 30kw
尺寸与重量 Size and weight	4000kg 3300x3150x1930mm	4500kg 3300x3450x1930mm	5500kg 3300x3650x1930mm

MSZSFQ系列

分切机 (不干胶、PVC薄膜)

Slitting And Rewinding (Self-adhesive, PVC Film)

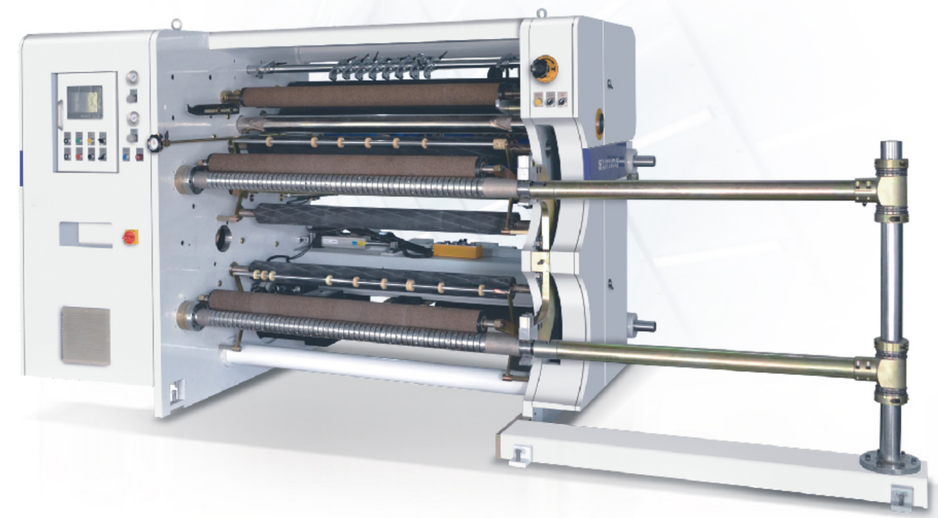

使用范围与性能
Range Of Use And Performance

本机适用于对各种卷筒材料的分切， 如不干胶材料、 薄膜 PVC、PET、型纸、透气膜、珠光膜等分切和复卷。1. 该机采用三伺服电机同步控制、 自动张力控制系统， 中心卷取方式。本机采用电机变频调速电机，保持加速中平稳运转。 PLC 自动计米、 报警等功能； 收卷采用 A、 B 滑差轴结构， 放卷采用超声波式 /CCD 纠边方式， 圆刀 / 平刀纵切废边自动排放装置， 气动式自动上料架结构（无轴上料架结构），配置装卸塔，卸料简单方便。

The machine is suitable for many kinds of jumbo roll materials,such as adhesive stickers/PVC/PET/Release paper /breathable film/Pearlized BOPP.The machine adopts three servo motors synchronous control、automatic tension,central surface rewinding.The machine use frequency converter adjust speed motor,it can keep stable operation when speedup.It adopts PLC autometer count,automatic alarm;The rewinding adopts A、B slip shaft structures(Air shaft can be choosed).The unwinding adopts ultrasonic correcting edge position.Circular /flat knife cut the materials.The waste edge uses high pressure air blower to discharge.Hydraulic shaftless loading structure.Loading rock,material unloading convenience.

型号 Model	MSZSFQ-1300C	MSZSFQ-1600C
最大放卷宽幅 Maximum width of unwinding	1300mm	1600mm
最大放卷直径 Maximum diameter of unwinding	Φ800mm(1400mm)	Φ800mm(1400mm)
最小分切宽度 Minimum width of slitting	30mm	30mm
最大收卷直径 Maximum diameter of winding	Φ600mm	Φ600mm
分切速度 Speed of slitting	80-400m/min	80-400m/min
功率与电源 Power supply	380V/50hz 21kw	380V/50hz 27kw
尺寸与重量 Size and weight	3500kg 2050x3000x17200mm	4000kg 2050x3300x1720mm

MSBDFQ系列

分切机 (吸管纸、包装纸)

Slitting And Rewinding (Straw Paper, Packaging Paper)

使用范围与性能
Range Of Use And Performance

本机适用于各种卷筒包装材料的分切和复卷 ，如各种卷筒纸、特种纸、 无纺布、 铝箔、 PVC/PET/PE 保护膜等。采用背靠背式分切收卷， 可对材料进行细小规格分切。主电机采用三伺服电机，配置变频调速。放卷采用超声波 /CCD 纠偏， 收卷采用双伺服电机控制， 中心卷取与表面接触并用， AB 双轴交叉收卷， 永不咬口，采用 PLC 自动计米、 报警停机等功能，圆刀 / 平刀分切方式，高压风机废边自动排出。

Machine suitable many kinds of jumbo roll materials, such as Paper rolls, specialty paper,nonwovens ， aluminum foil , PVC/PET/PE film. Using back-to-back type parting, the material can be slit into small size. This machine adopts three servo motorscontrol and automatic taper tension,central surface rewinding.Frequency converter control motors,running smoothly in acceleration.The unwinder adopts the automatic ultrasonsic correction, The winding adoptsA. B air shaft, two magnetic powder control (or choose servo motor).It adopts PLC autometer count,automatic alarm.Circular /razor knife cut the materials.The waste edge uses high pressure air blower to discharge.

型号 Model	MSBDFQ-1100	MSBDFQ-1300
最大放卷宽幅 Maximum width of unwinding	1100mm	1300mm
最大放卷直径 Maximum diameter of unwinding	Φ1400mm	Φ1400mm
最小分切宽度 Minimum width of slitting	5mm	5mm
最大收卷直径 Maximum diameter of winding	Φ600mm	Φ600mm
整机功率 Total power	18kw	20kw
尺寸与重量 Size and weight	3300kg 3300x2700x1450mm	3600kg 3300x2900x1450mm

机器背面 Machine back

MSLBFQ系列

分切机(铝箔、特种纸)

Slitting And Rewinding (Aluminum Foil, Paper)

Machine back机器背面

使用范围与性能
Range Of Use And Performance

该机主要用于各种礼品纸、 墙纸、 防水材料等装饰材料的复卷。主电机采用三伺服电机，配置变频调速。放卷采用超声波 /CCD 纠偏，收卷采用双伺服电机控制，中心卷取与表面接触并用，AB 双轴交叉收卷， 永不咬口。采用 PLC 自动计米、 报警停机等功能。圆刀 / 平刀分切方式，高压风机废边自动排出。

This machine is mainly used for all kinds of gift paper, wall paper, waterproof materials and other decorative materials of rewinding.1.This machine adopts three servo motorscontrol and automatic taper tension,central surface rewinding.Frequency converter control motors,running smoothly in acceleration.The unwinder adopts the automatic ultrasonsic correction. The winding adoptsA. B air shaft, two magnetic powder control (or choose servo motor).It adopts PLC autometer count,automatic alarm.Circular /flat knife cut the materials.The waste edge uses high pressure air blower to discharge.

型号 Model	MSLBFQ-1300	MSLBFQ-1600 （可定制）
最大放卷宽幅 Maximum width of unwinding	1300mm	1600mm
最大放卷直径 Maximum diameter of unwinding	Φ1400mm	Φ1400mm
最小分切宽度 Minimum width of slitting	5mm	5mm
最大收卷直径 Maximum diameter of winding	Φ800mm	Φ800mm
整机功率 Total power	25kw	25kw
尺寸与重量 Size and weight	4800kg 3450x3300x1650mm	5500kg 3450x3600x1650mm

MSHQJ-BG

横切机(汉堡纸机+膜包装机)

Sheet Cutting Machine
(Hamburg Paper Machine+film Packaging Machine)

使用范围与性能
Range Of Use And Performance

本机适用于汉堡纸复合类卷筒包装材料的截切。本机采用 PLC 触摸屏控制，伺服电机控制定长裁切。传动系统采用气动、光电传感器等集中控制，本机集光、电、气一体，操作简便，裁切精度高，机械稳定，噪音低等优点。电机变频调速，自动计数，报警停车，磁粉张力控制。可纵向多段分切，废边采用风机自动排除。可以多卷同时横、纵裁切。可配置包装机，自动连线打包。

It adopts hamburger wrapping paper sheet cutting machine and film packing machine.It adopts pneumatic,photoelectric sensor for controlling transminssion system, with photo,electric, gas together, it has the functions of easy operation, high precision, good stability,low noise.This machine has the functions of the frequency converter timing device, automatic counting, stop working by alarm magnetic powder tension control, can be cutted vertically, adopt blower to get rid of waste This machine can be with 1 rolls \ 2 rolls \ 4 rolls sloading systerm.With packaging machine.

型号 Model	MSHQJ-1100BG	MSHQJ-1400BG
最大原材料直径 Max diameter of master roll	Φ1400mm	Φ1400mm
有效宽度 Max.width of master roll	1100mm	1400mm
裁切参数 Cutting parameter	速度 / Speed 120times/min 精度 / Precision ±0.2mm	速度 / Speed 120times/min 精度 / Precision ±0.2mm
纵向分切成品宽度 Max.width of cutting	500mm	500mm
电源总功率 Total power	16kw	16kw
尺寸与重量 Size and weight	4200kg 5400x8600x1840mm	4500kg 5400x8950x1800mm

局部细节 Local details

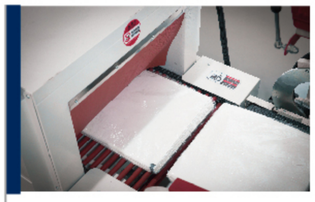

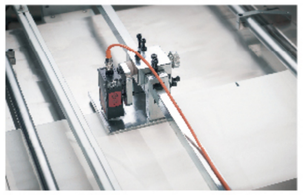

MSHQJ-A4

横切机 (A4切纸机/四卷+包装机)

Sheet Cutting Machine
(A4 Paper Cutter/four Rolls+paper Packaging Machine)

使用范围与性能
Range Of Use And Performance

本机适用于各种办公用纸、高光相纸，以及纸塑复合类等卷筒包装材料的截切。本机采用 PLC 触摸屏控制，伺服电机控制定长裁切。传动系统采用气动、光电传感器等集中控制，本机集光、电、气一体，操作简便，截切精度高，机械稳定，噪音低等优点。电机变频调速，自动计数，报警停车，磁粉张力控制。可纵向多段分切，废边采用风机自动排除。可以多卷同时横、纵裁切。可配置包装机，自动连线打包。

It adopts PLC touch screen control, servo motor for controlling constant-length cutting.It adopts pneumatic,photoelectric sensor for controlling transminssion system, with photo,electric, gas together, it has the functions of easy operation, high precision, good stability,low noise.This machine has the functions of the frequency converter timing device, automatic counting, stop working by alarm magnetic powder tension control, can be cutted vertically, adopt blower to get rid of waste This machine can be with 1 rolls.2 rolls.4 rolls.sloading systerm.With packaging machine.

型号 Model	MSHQJ-1100A4	MSHQJ-1400A4
最大原材料直径 Max diameter of master roll	Φ1400mm	Φ1400mm
有效宽度 Max.width of master roll	1100mm	1400mm
裁切参数 Cutting parameter	速度 / Speed ≤200times/min	精度 / Precision ±0.2mm
纵向分切成品宽度 Min.width of cutting	A4	A4
电源总功率 Total power	26 kw	29kw
尺寸与重量 Size and weight	10000kg 19300x7900x2000mm	12000kg 19300x8500x2000mm

局部细节 Local details

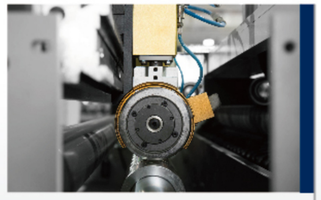

MSHQJ-F

横切机 (切纸机/四卷+前输送)

Sheet Cutting Machine
(Paper Cutter/four Rolls+front conveyor)

使用范围与性能
Range Of Use And Performance

本机适用于各种办公用纸、高光相纸，以及纸塑复合类等卷筒包装材料的裁切。本机采用 PLC 触摸屏控制，伺服电机控制定长裁切。传动系统采用气动、光电传感器等集中控制，本机集光、电、气一体，操作简便，裁切精度高，机械稳定，噪音低等优点。电机变频调速，自动计数，报警停车，磁粉张力控制。可纵向多段分切，废边采用风机自动排除。可以多卷同时横、纵裁切。自动输送，自动整理。

This machine is suitable for cutting various office paper, high gloss photo paper, and roll packaging materials such as paper plastic composites. This machine adopts PLC touch screen control and servo motor control for fixed length cutting. The transmission system adopts centralized control such as pneumatic and photoelectric sensors. This machine integrates light, electricity, and gas, with simple operation, high cutting accuracy, mechanical stability, and low noise. Motor variable frequency speed regulation, automatic counting, alarm shutdown, magnetic powder tension control. It can be longitudinally divided into multiple sections, and waste edges are automatically removed by a fan. Multiple rolls can be cut horizontally and vertically simultaneously. Automatic transmission and organization

局部细节 Local details

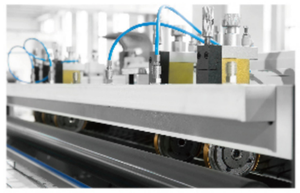

型号 Model	MSHQJ-1100F	MSHQJ-1400F
最大原材料直径 Max diameter of master roll	Φ1400mm	Φ1400mm
有效宽度 Max.width of master roll	1100mm	1400mm
最小纵向分切宽度 Min.width of cutting	100mm	100mm
裁切长度 Length of cutting	200-500mm	200-500mm
裁切参数 Cutting parameter	速度 / Speed ≤200times/min	精度 / Precision ±0.2mm
电源总功率 Total power	20 kw	23kw
尺寸与重量 Size and weight	8000kg 18500x1900x2100mm	10000kg 18500x2200x2100mm

MSHQJ-E

横切机(A4切纸机)

Sheet Cutting Machine (A4 Paper Cutter)

使用范围与性能
Range Of Use And Performance

本机适用于各种办公用纸、高光相纸、以及纸塑复合类等卷筒包装材料的裁切。本机采用 PLC 触摸屏控制，伺服电机控制定长裁切。传动系统采用气动、光电传感器等集中控制，本机集光、电、气一体，操作简便，裁切精度高，机械稳定，噪音低等优点。电机变频调速，自动计数，报警停车，磁粉张力控制。可纵向多段分切，废边采用风机自动排除。可以多卷同时横、纵裁切，侧边输送整理。

This machine is suitable for cutting big rolls packaging materials such as office copy paper, paper-plastic,photo paper material,etc.It adopts PLC touch screen control, servo motor for controlling constant-length cutting.It adopts pneumatic,-photoelectric sensor for controlling transminssion system, with photo,electric, gas together, it has the functions of easy operation, high precision, good stability,low noise.This machine has the functions of the frequency converter timing device, automatic counting, stop working by alarm magnetic powder tension control, can be cutted vertically, adopt blower to get rid of waste edg.This machine can be with 1 roll.2 rolls.4 rolls loading systerm. Convey out in the side

型号 Model	MSHQJ-1100E	MSHQJ-1400E
最大原材料直径 Max.diameter of master roll	Φ1400mm	Φ1400mm
有效宽度 Max.width of master roll	1100mm	1400mm
裁切参数 Cutting parameter	速度 / Speed ≤200times/min	精度 / Precision ±0.2mm
纵向分切成品宽度 Min.width of cutting	A4/A3	A4/A3
电源总功率 Total power	9.5 kw	11kw
尺寸与重量 Size and weight	4500kg 6200x3300x1400mm	4800kg 6200x3800x1400mm

MSHQJ-C

横切机 (纵切+前输送)

Cross Cutting Machine
(Vertical Cutting+Front Conveyor)

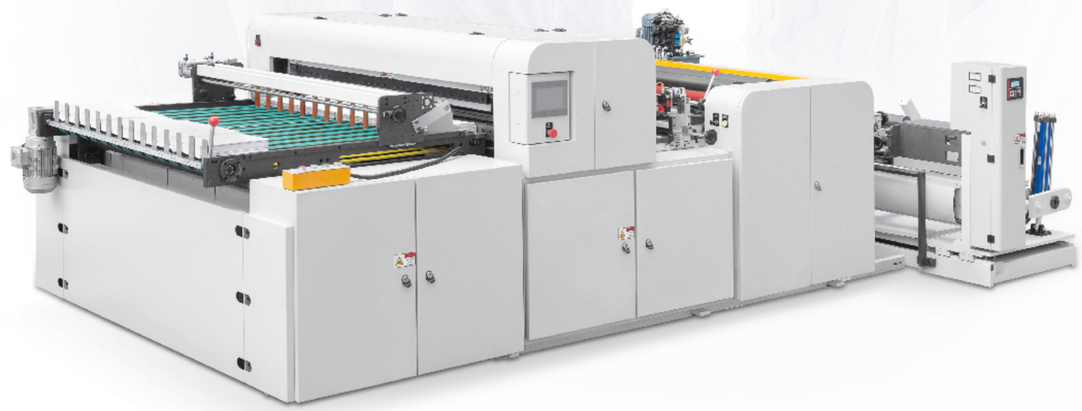

使用范围与性能
Range Of Use And Performance

本机适用于各种办公用纸、高光相纸、以及纸塑复合类等卷筒包装材料的裁切。采用变频调速，PLC 触摸屏控制，伺服电机控制定长裁切。自动报警停机，磁粉张力控制。可纵向多段分切，废边采用风机自动排除，搭配前输送整理。

This machine is suitable for cutting various office paper, high gloss photo paper, and paper plastic composite packaging materials on rolls. Adopting variable frequency speed regulation, PLC touch screen control, and servo motor control for fixed length cutting. Automatic alarm shutdown, magnetic powder tension control. It can be vertically divided into multiple sections, and the waste edges are automatically removed by a fan, combined with pre conveying and sorting.

型号 Model	MSHQJ-1100C	MSHQJ-1400C	MSHQJ-1800C
最大裁切宽度 Max. width of master roll	1100mm	1400mm	1800mm
最大放卷直径 Maximum diameter of unwinding	Φ1400mm	Φ1400mm	Φ1400mm
裁切参数 Cutting parameter	长度 / Length 20-800mm 速度 / Speed 30-200times/min	精度 / Precision ±0.2mm	
电源总功率 Total power	9kw	11kw	12.5kw
尺寸与重量 Size and weight	4000kg 6000x1900x1400mm	4200kg 6000x2200x1400mm	6000kg 6000x2600x1400mm

MSHQJ-D

横切机（+纵切）
Sheet Cutting Machine (+Vertical Cutting)

使用范围与性能 Range Of Use And Performance	本机适用于各种纸张、 膜类、 纸塑复合类、 布类、 皮革类、PVC、 PET 膜类等大型卷筒包装材料的裁切。本机采用伺服电机 PLC 控制定长裁切。传动采用气同步带、 制动电机同步控制。电机变频调速，自动计数，报警停车，磁粉张力自动控制，可纵向多段分切，废边采用风机自动排除。 This machine is suitable for all kinds of paper, film, paper-plastic composite, cloth, leather, PVC, PET and other large drum truncation of packaging materials.1.It adopts PLC control servo motor fixed-length truncation. Drive b synchronous belt, brake motor synchronization control.Pneumatic feeding motor variable frequency speed regulation, automatic counting and give alarm&stop, magnetic powder tension automatic control, can be longitudinal section cutting, waste edg removal by fan automatically excluded.

型号 Model	MSHQJ-1100D	MSHQJ-1400D
原材料最大直径 Max.diameter of master roll	Φ1400mm	Φ1400mm
最大裁切宽度 Max.diameter of master roll	1100mm	1400mm
裁切参数 Cutting parameter	长度 / Length 20-800mm 速度 / Speed ≤200times/min	精度 / Precision ±0.2mm
整机功率 Total power	6.5kw	9kw
尺寸与重量 Size and weight	3200kg 5450x1900x1400mm	3400kg 5050x2200x1400mm

MSHQJ-B

横切机 (连体上料)
Sheet Cutting Machine (Conjoint Feeding)

Machine back机器背面

使用范围与性能 Range Of Use And Performance	本机应用与各种纸张、不干胶、PET/ 纸 塑复合类、彩印复合类等卷筒类包装材质的裁切。广泛应用于纸类制品加工、印刷、包装、标签、电子行业。本机采用伺服电机 PLC 控制定长裁切。传动采用气同步带、制动电机同步控制。电机变频调速，自动计数，报警停车，磁粉张力自动控制，可纵向多段分切，废边采用风机自动排除。 This machine is used for cutting all kinds of paper, self-adhesive, PET/paper-plastic composite, color printing composite and other reel packaging materials. It is widely used in paper products processing, printing, packaging, labele, and electronic industries.It adopts PLC control servo motor fixed-length truncation. Drive by synchronous belt, brake motor synchronization control. Pneumatic feeding motor variable frequency speed regulation, automatic counting and give alarm&stop, magnetic powder tension automatic control, can be longitudinal section cutting, adopts waste edg removal suction.

型号 Model	MSHQJ-800B	MSHQJ-1400B
原材料最大直径 Max diameter of master roll	Φ800mm	Φ800mm
最大裁切宽度 Max. diameter of master roll	800mm	1400mm
裁切参数 Cutting parameter	长度 / Length 20-800mm 速度 / Speed 20-200times/min	精度 / Precision ±0.2mm
整机功率 Total power	6.5 kw	8 kw
尺寸与重量 Size and weight	1400kg 3500x1600x1800mm	2100kg 3500x2200x1800mm

MSZHQ-B

横切机(自动整理)

Sheet Cutting Machine (Automatic stacking type)

使用范围与性能
Range Of Use And Performance

本机适用于各种纸张、纸塑复合、彩印复合、不干胶、无尘纸、薄膜等大型卷筒材料的裁切。广泛应用于纸制品加工业、 印刷包装行业等。采用伺服电机定长， 裁切精度高， PLC 采用日本松下，打标计数，报警停机，自动堆垛，自动整理。

This machine is suitable for cutting big rolling packaging materials such as paper, paper plastic composite, color printing,Color printing adhesive. Thin film.etc truncated large drum material. Widely used in paper products processing industry, printing and packaging industry, etc.1.Servo motor adjust lenght high sutting precision.2.PLC adopts Japanese panasonic,marks inserter, auto alarm and stop.3.Automatic stacking and sorting.

型号 Model	MSZHQ-1100B	MSZHQ-1400B	MSZHQ-1600B
最大裁切宽度 Max. width of master roll	1100mm	1400mm	1600mm
最大放卷直径 Max. diameter of master roll	Φ1400mm	Φ1400mm	Φ1400mm
裁切参数 Cutting parameter	长度 / Length 300-1200mm 精度 / Precision ±0.2mm 速度 / Speed ≤200times/min		
原材料范围 Range of raw material thickness	70-500g/m²	70-500g/m²	70-500g/m²
堆垛高度 Max. height of stacking	1200mm	1200mm	1200mm
整机功率 Total power	8kw	10kw	12kw
尺寸与重量 Size and weight	4000kg 5800x2700x2000mm	4200kg 5800x3000x2000mm	5000kg 5800x3200x2000mm
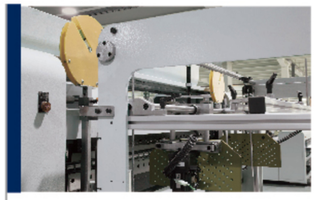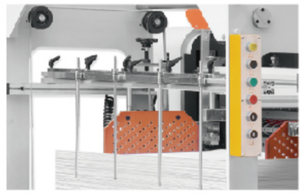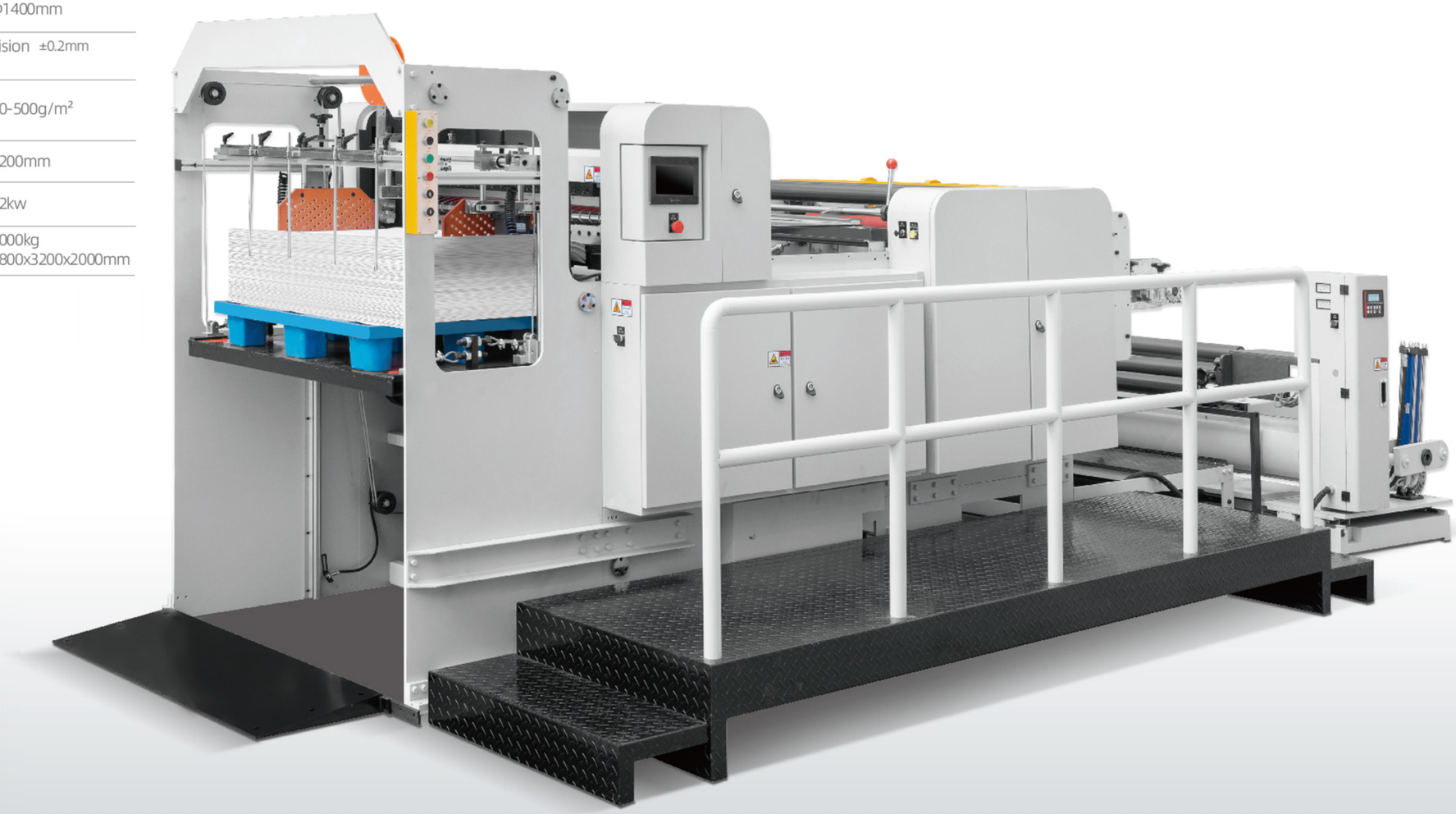
局部细节 Local details