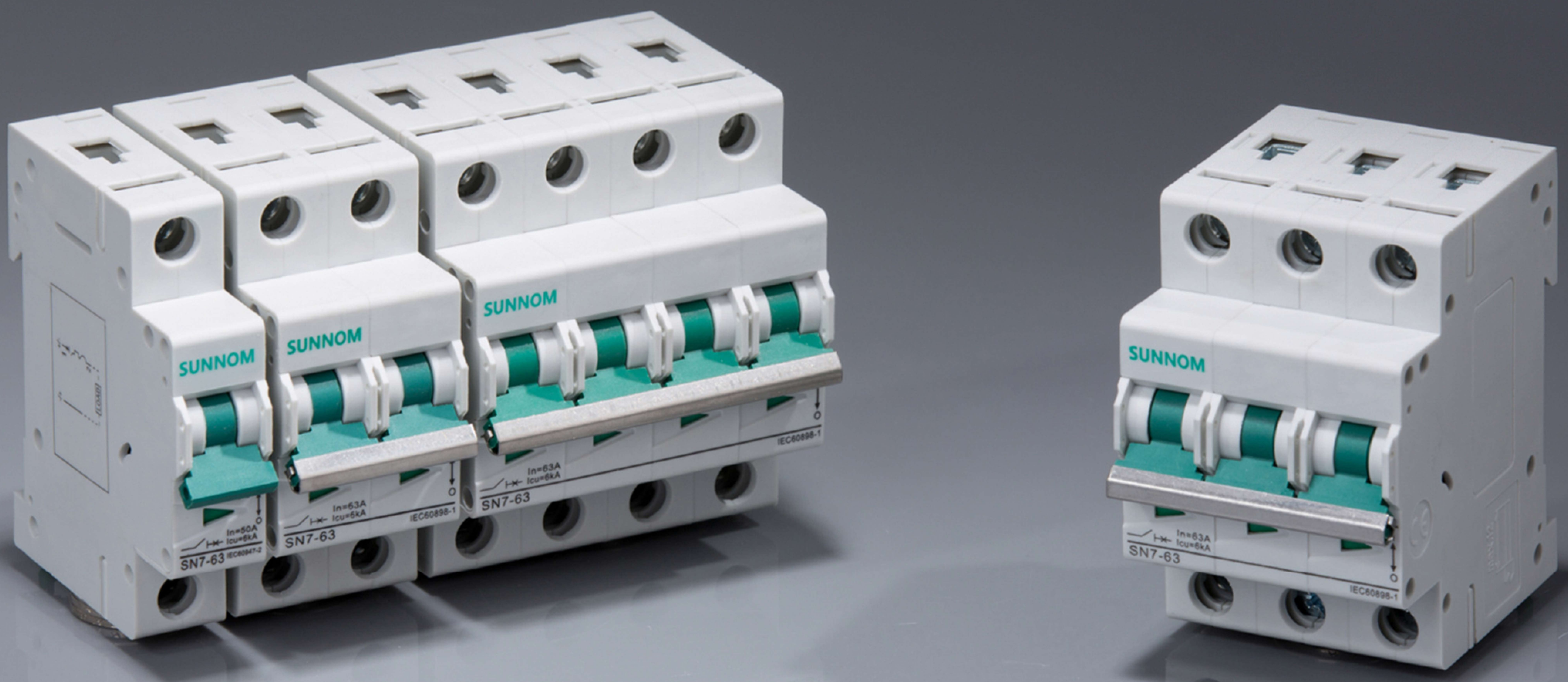

DC series

Solar DC Mini Circuit Breaker

SN7-63 SNC-125

SUNNOM

SN7-63 PV

SOLAR DC MINIATURE CIRCUIT BREAKER (DC MCB)

SUNNOM

Application

SN7-63 PV DC breaker supplementary protectors are designed to provide overcurrent protection within appliances or electrical equipment, where a branch circuit protection is already provided or not required. Devices are designed for direct current (DC) control circuit applications.

Specifications

SN7-63 PV Series Circuit Breaker		SN7-63 PV				
Frame Degree Rated Current (A)		63				
Pole		1P	2P	3P	4P	2P(CUSTOMIZED)
Rated Operating Voltage (V DC)		250	550	750	1000	800
Rated Insulation Voltage Ui (V DC)		1200V				
Rated Current In (A)		3,6,10,16,20,25,32,40,50,63A				
Rated Impact Voltage Uimp (kV)		4				
Ultimate Breaking Capacity Icu (kA)		6				
Run Breaking Capacity Ics (%Icu)		75%				
Curve Type		C				
Trip Type		Thermal-magnetic				
Mechanical	Actual average value	9700				
	Standard value	9700				
Electric	Actual average value	300				
	Standard value	300(accord to TUV standard)				

Control and Indication

Shunt release (SHT)	Option
Undervoltage release (UNT)	
Auxiliary contact (AX)	
Alarm contact (AL)	

Condition and Installation

Wiring capacity (mm2)		In≤ 32A, 1-6, I≥40A, 10~16			
Ambient temperature (°C)		-35~+70			
Altitude		≤2000			
Relative humidity		≤9 5%			
Pollution Level		3			
Installation Environment		No obvious shock and vibration			
Installation category		Class III			
Installation		DIN Standard rail			
Dimensions(W)x(H)x(Deep)	W	18	36	54	72
	H	80	80	80	80
	Deep	71	71	71	71
Weight (kg)		0.12	0.24	0.36	0.48

Connection

Pole	1P	2P	3P	4P
Connection		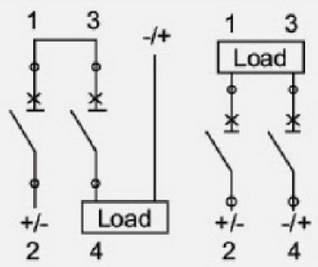	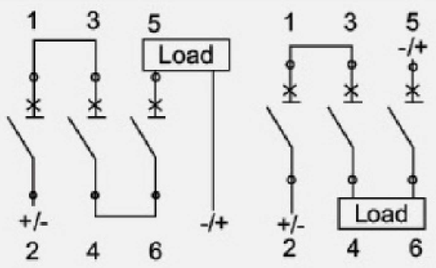	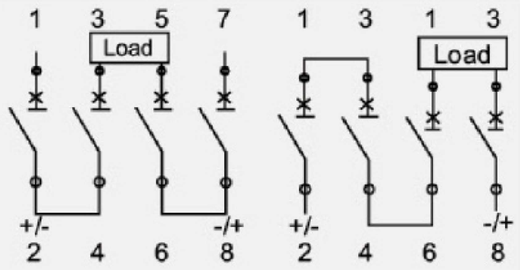

Over current tripping characteristic

Test	Test Current	Initial State	Limited Time	Expected Result	Remarks
a	1.05In	Cold state	t 1h	Non-tripping	
b	1.3In	Right after test numbera	t<1h	Tripping	The current is rising within 5s
c	7In	Cold state	t ⩽ s	Non-tripping	
d	10In	Cold state	t 0.1s	Tripping	

Current correction values used at different ambient temperatures

Temperature / Fixed current(A) / Rated Current (A)	-35	-30	-20	-10	0	10	20	30	40	50	60	70
3A	3.9	3.78	3.69	3.57	3.42	3.3	3.12	3	2.88	2.79	2.64	2.49
6A	7.8	7.56	7.38	7.14	6.84	6.6	6.24	6	5.76	5.64	5.28	4.98
10A	13.2	12.7	12.5	12	11.5	11.1	10.6	10	9.6	9.3	8.9	8.4
16A	21.12	20.48	20	19.2	18.4	17.76	16.96	16	15.36	14.88	14.24	13.44
20A	26.4	26.4	25	24	23	22.2	21.2	20	19.2	18.6	17.8	16.8
25A	33	32	31.25	30	28.75	27.75	26.5	25	24	23.25	22.25	21
32A	42.56	41.28	40	38.72	37.12	35.52	33.93	32	30.72	29.76	28.16	26.88
40A	53.2	51.2	50	48	46.4	44.8	42.4	40	38.4	37.2	35.6	33.6
50A	67	65.5	63	60.5	58	56	53	50	48	46.5	44	41.5
63A	83.79	81.9	80.01	76.86	73.71	70.56	66.78	63	60.48	58.9	55.44	52.29

Current correction factor used at different altitudes

Rated Current (A)	Different altitude correction factors		
	⩽ 2000m	2000~3000m	⩾ 3000m
3,6,10,16,20,25,32,40,50,63A	1.0	0.9	0.8

SN7-63 PV

SOLAR DC MINIATURE CIRCUIT BREAKER (DC MCB)

Details

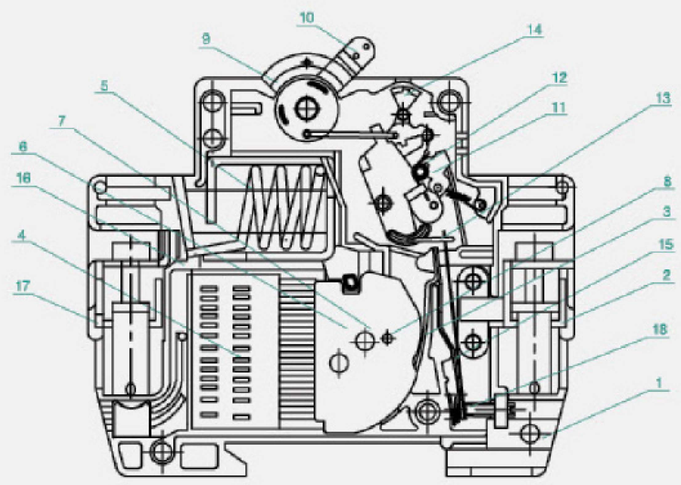

1. Shell
2. Wiring board
3. Static contact
4. Arc chamber
5. Copper coil
6. Insulation plate
7. Moving contact
8. Fixed contact
9. Spring
10. Handle
11. Lock catch knuckle
12. Tripping chain
13. Jump pin
14. Indicator
15. Bimetal
16. Soft linking
17. Wiring board
18. Adjusting screw

Specifications

Rated current In(A)	Copper wire nominal cross sectional area(mm)
3,6	1
10	1.5
16,20	2.5
25	4
32	6
40,50	10
63	16

Dimensions(mm)

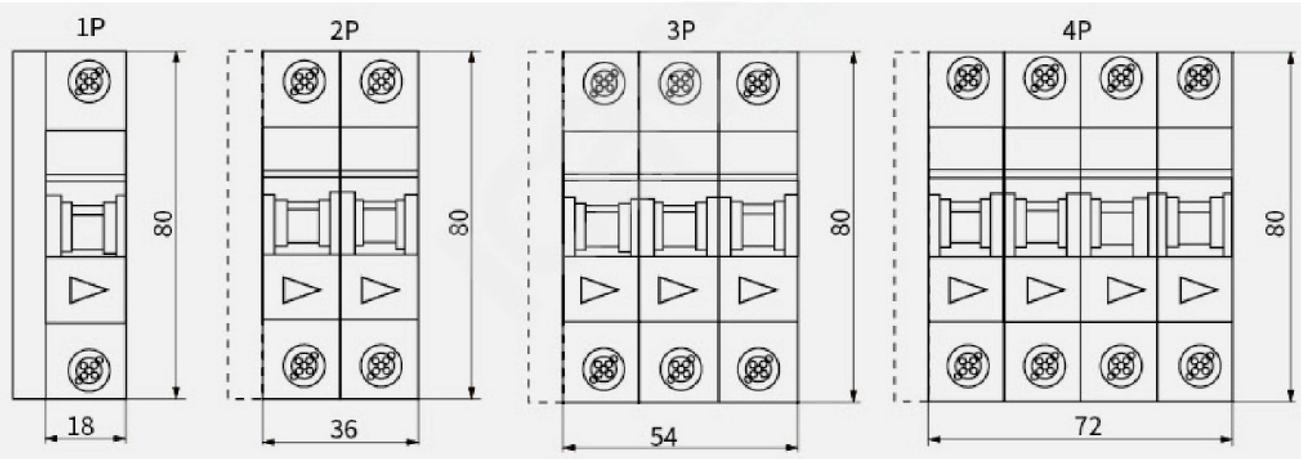

Characteristic Curve

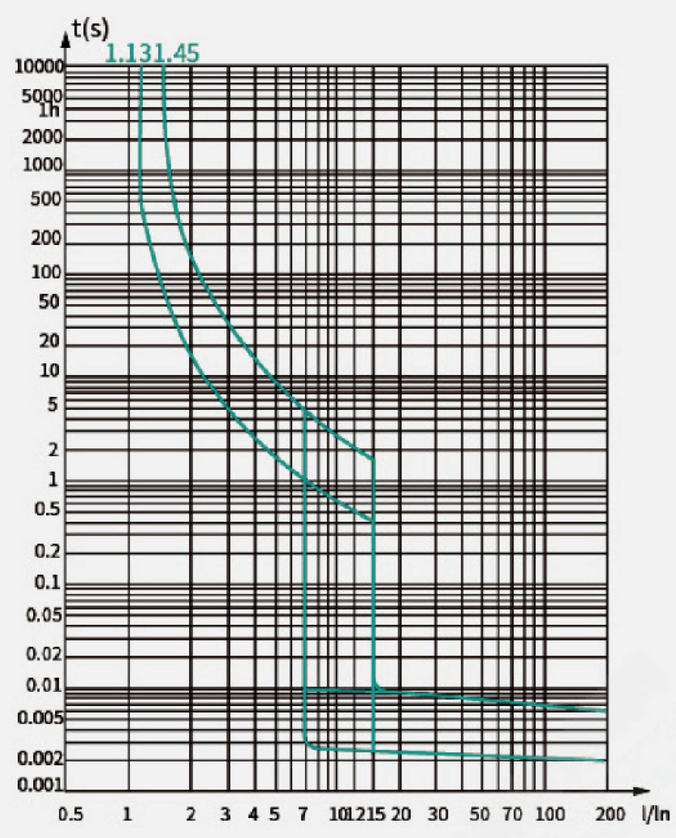

SUNNOM

SNC-125 PV

SOLAR DC MINI CIRCUIT BREAKER (DC MCB)

Application

SNC-125 PV high breaking capacity circuit breaker is specially for solar PV system. The current is form 63A to 125A and voltage up to 1000VDC.
Standard according to IEC/EN60947-2.

Specifications

Rated Current	63,80,100,125A			
Rated Voltage	250VDC	550V/800VDC	750VDC	1000VDC
No. of Pole	1P	2P	3P	4P
Mechanical Life	20000 times(C.O.)			
Electrical Life	20000 times(C.O.)		125A: 1000 Times	
Icu:	10KA			
Ics:	63,80,100A:10KA		125A: 7.5KA	
Weight(G)	150	300	460	620

Dimensions

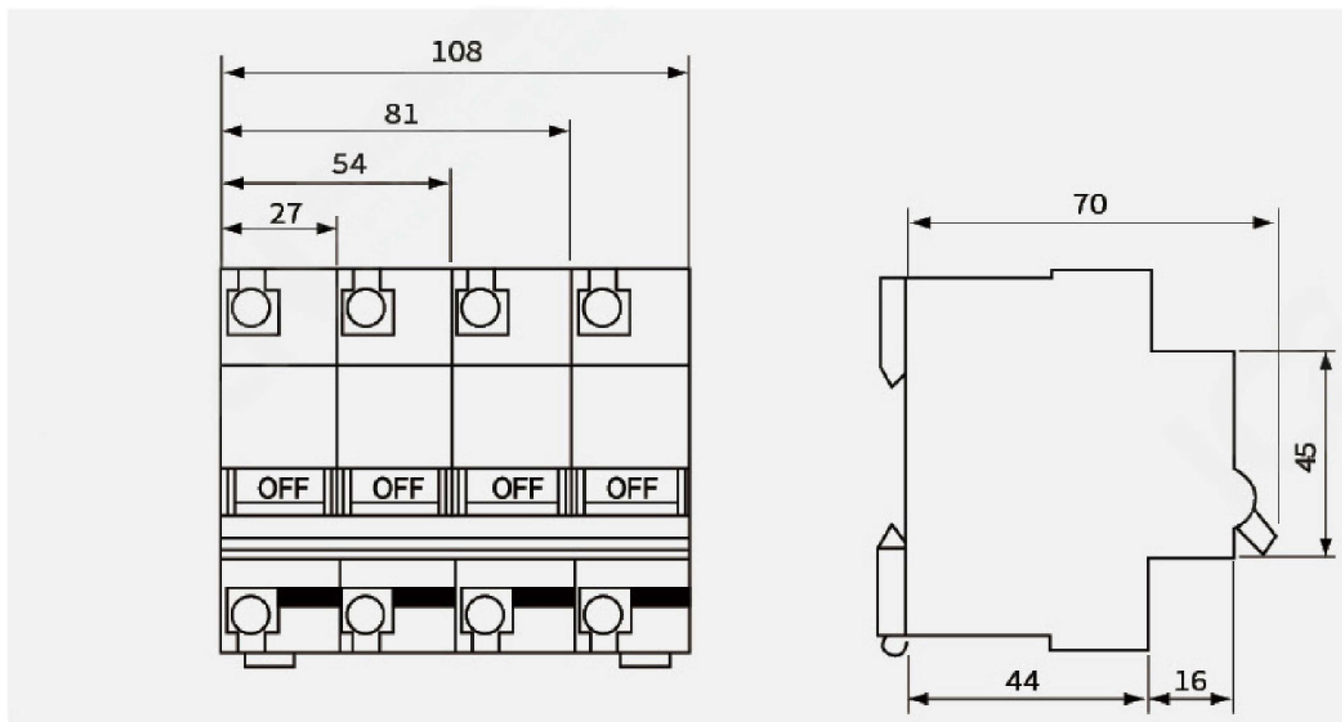

Installation

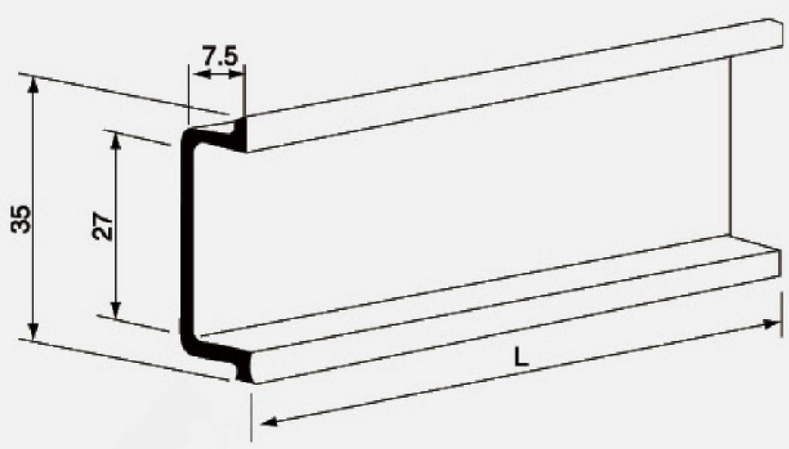

AC series

AC Mini Circuit Breaker

- SN7-63
- SN8-63

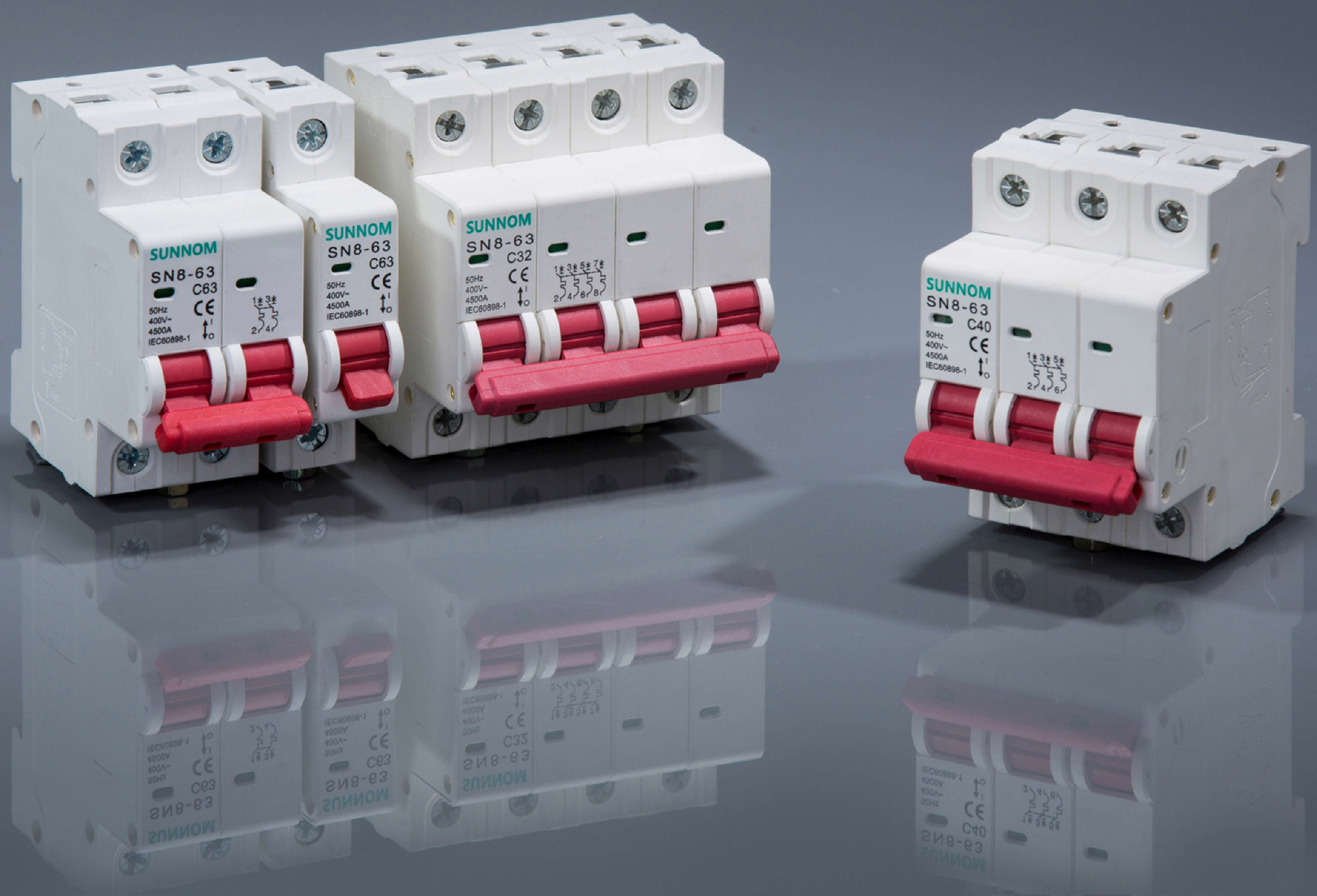

SUNNOM

SN7-63

MINI CIRCUIT BREAKER (AC MCB)

Application

SN7-63 AC MCB have protective function as overload, and are used in lighting distribution system in industry commerce and dwelling, and protect fractional electric motors. And they also have many merits of high protective grade(up to IP20), high breaking capacity, reliable sensitive, action convenient, multi pole assembling, long life ect. The are mainly adapted to the circuit of AC 50Hz, 250V in single pole, 415V in double, three, four poles for protecting overload and short circuit. Mean while, they are also used in turning on or off the electric apparatus and lighting circuit under the normal conditions.

Specifications

Standard	EN60898(IEC60898)/IEC60947-2
Rated Voltage	230V/400V AC(1P), 400V AC(2P, 3P)
Rated Current	3,6,10,16,20,25,32,40,50,63A
Rated Breaking Capacity	10KA IEC60898(3~63A)
Characteristic Curve	B, C, D
Max. Fuse That Can Be Connected To	100AGL(>10KA)
Selective Grade	3
Working Ambient Temperature	-5 ~+40
Enclosed Protective Class	IP20
Nominal Frequency	50/60Hz
Maximum Operating Voltage(Ue)	≥ 400V AC
Insulation Voltage(Ui)	≥ 6KV
Voltage Testing Pulse(Uimp)	≥ 10KA
Maximum Cutting Capacity(Icu)	⩾ 10KA
Electrical Life	Not less than 8000 times
Mechanical Life	Not less than 20000 times

Dimensions

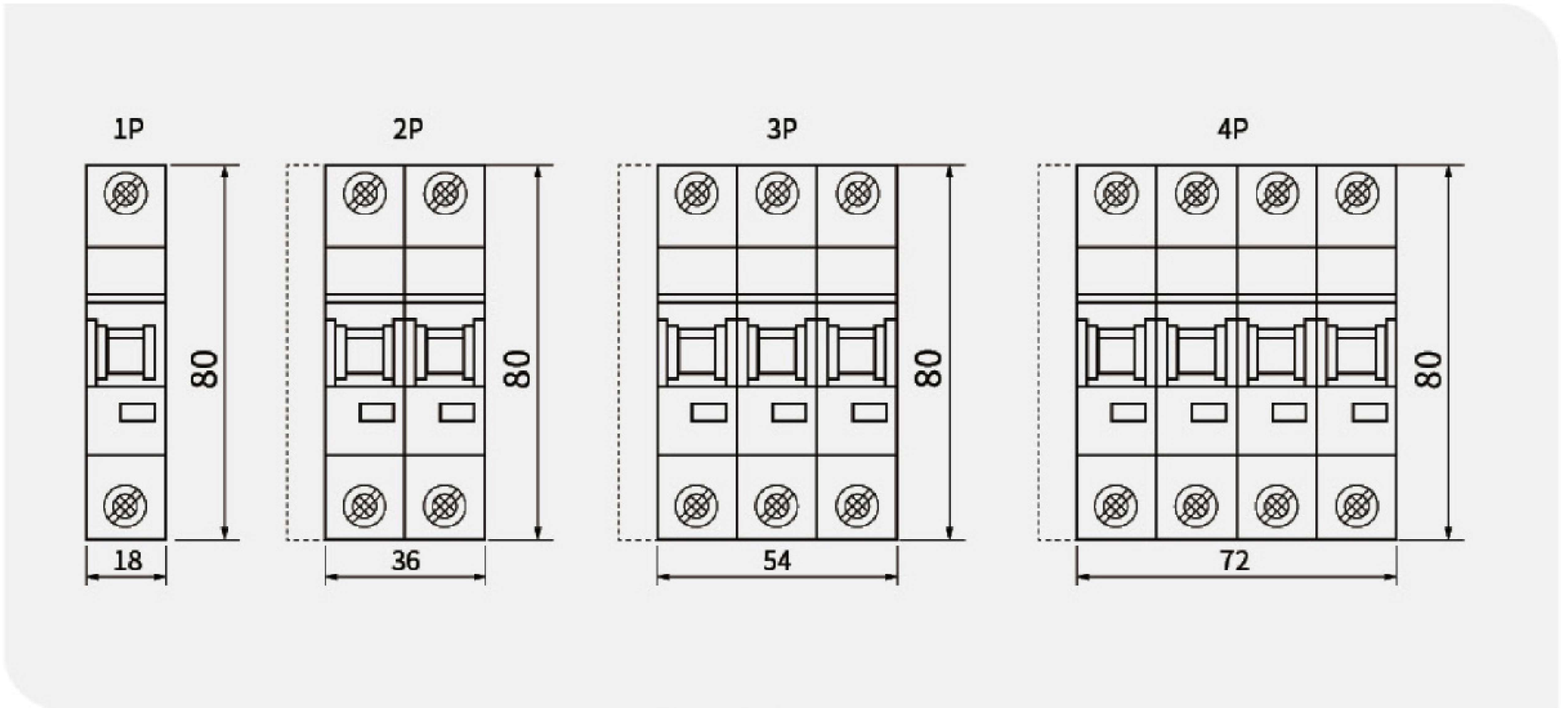

Over current tripping characteristic

Item	Model	Rated Current(A)	Initial State	Test Current	Limited Time	Limited Time	Remark
a	B, C, D	1~63	Cold state	1.13In	t 1h	Non-tripping	
b	B, C, D	1~63	Immediately after the previous test	1.45In	t<1h	Tripping	The current rise steadily to a fixed value within 5s
c	B, C, D	In≤32	Cold state	2.55In	1s<t<60s	Tripping	
		In≤32	Cold state	2.55In	1s<t<120s	Tripping	
	B	1~63	Cold state	3In	t≤0.1s	Non-tripping	
				5In	t≤0.1s	Tripping	
	C			5In	t≤0.1s	Non-tripping	
				10In	t≤0.1s	Tripping	
	D			10In	t≤0.1s	Non-tripping	
				10In	t≤0.1s	Tripping	

Characteristic Curve

SN7-63 Characteristic curve

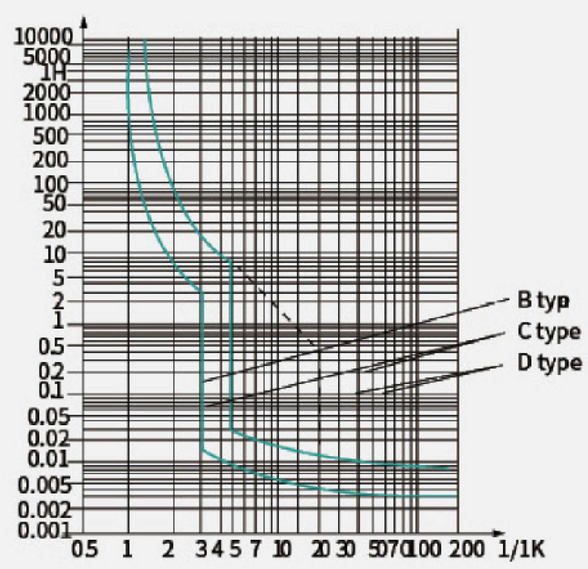

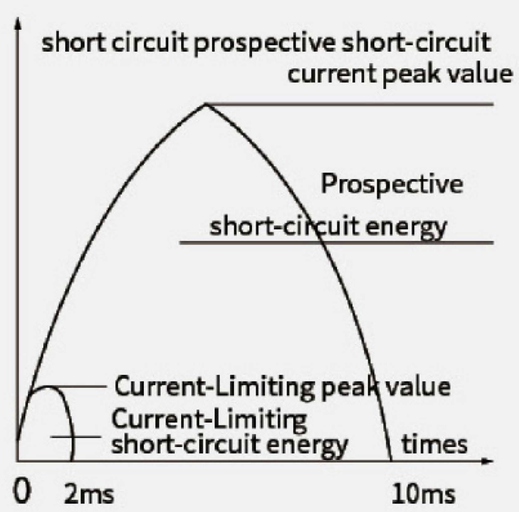

Current correction values used at different ambient temperatures

Temperature / Fixed current(A) / Rated Current (A)	-35	-30	-20	-10	0	10	20	30	40	50	60	70
3A	3.9	3.78	3.69	3.57	3.42	3.3	3.12	3	2.88	2.79	2.64	2.496
6A	7.8	7.56	7.38	7.14	6.84	6.6	6.24	6	5.76	5.64	5.28	4.98
10A	13.2	12.7	12.5	12	.11.5	11.1	10.6	10	9.6	9.3	8.9	8.4
16A	21.12	20.48	20	19.2	18.4	17.76	16.96	16	15.36	14.88	14.24	13.44
20A	26.4	25.6	25	24	23	22.2	21.2	20	19.2	18.6	17.8	16.8
25A	33	32	31.25	30	28.75	27.75	26.5	25	24	23.25	22.25	21
32A	42.56	41.28	40	38.72	37.12	35.52	33.93	32	30.72	29.76	28.16	26.88
40A	53.2	51.2	50	48	46.4	44.8	42.4	40	38.4	37.2	35.6	33.6
50A	67	65.5	63	60.5	58	56	53	50	48	46.5	44	41.5
63A	83.79	81.9	80.01	76.86	73.71	73.71	66.78	63	60.48	58.9	55.44	52.29

Current correction factor used at different altitudes

Rated Current (A)	Different altitude correction factors		
	≤2000m	2000~3000m	≥3000m
3,6,10,16,20,25,32,40,50,63A	1.0	0.9	0.8

Wire connection terminals

Rated current In(A)	Copper wire nominal cross sectional area(mm)
3,6	1
10	1.5
16,20	2.5
25	4
32	6
48	10
63	10

Application

SN8 AC MCB is applicable to a line of AC50/60Hz, 230/400V in single pole, 400V in double, three, four poles for protecting overload and short circuit, and rated current up to 63A. It can also be used for infrequent line conversion under the normal condition. The breaker is applicable to lighting distribution system in industrial enterprise, commercially district, high-rise building and dwelling house. It conforms with the standards of IEC60898 -1.

Main Technical Parameter

Type	SN8-63			
Pole	1P		2P,3P,4P	
Rated current (A)	6, 10, 16, 20, 25, 32, 40, 50, 63			
Rated voltage(V)	230 / 400		400	
Ambient temperature	-5℃ ~+40℃			
Type of instantaneous release	C	D	C	D
Rated short circuit breaking capacity Icn(kA)	1-32A: 6 50-63A: 4	4	1-32A: 6 50-63A: 4	4

Rated current(A)	Norminal cross section of wire mm^2
1-6A	1
10A	1.2
16.20A	2.5
25A	4
32A	6
40,50A	10
63A	16

The Over-current Protection Property

Ambient temperature	Initial status	Test current	Test time	Expected result	Note
30±2℃	Cold oosition	1.13 In	t ⩽ 1h	Non-release	-
	Carried out immediately after orevious test	1.45 In	t<Ih	Release	-
	Cold position	2.55 In	1s<t<60s(In ⩽ 32A)	Release	Current smoothly rises to specified value within 5s
	Cold position	2.55 In	1s<t<120s (In>32A)	Release	
-5~+40℃	Cold position	3 In	t ⩽ 0.1s	Non-release	Type B
	Cold position	5 In	t<0.1s	Release	Type B
	Cold position	5 In	t ⩾ 0.1s	Non-release	Type C
	Cold position	10 In	t<0.1s	Release	Type C
	Cold position	10 In	t ⩾ 0.1s	Non-release	Type D
	Cold position	20 In	t<0.1s	Release	Type D
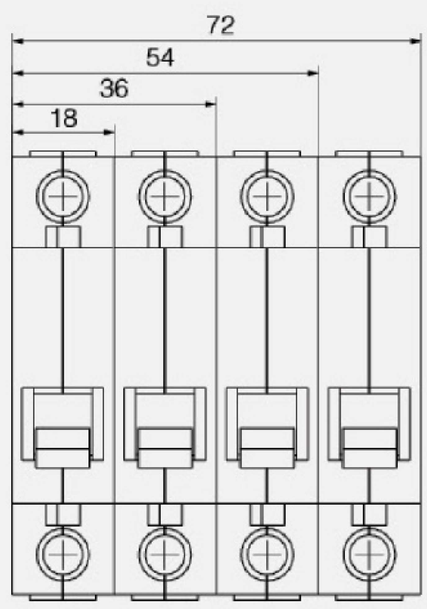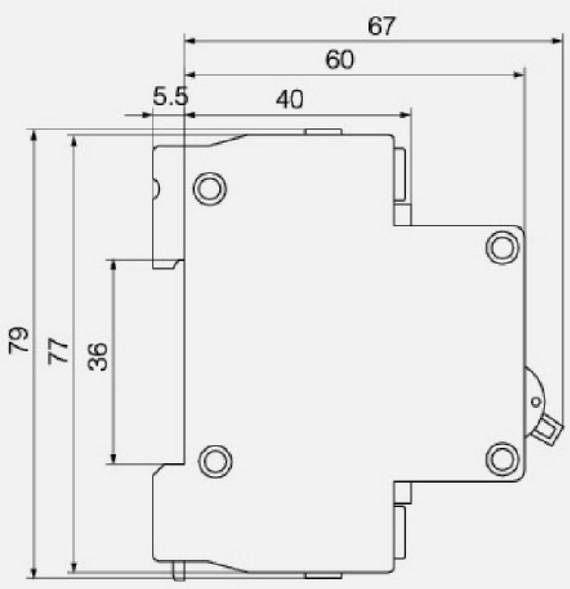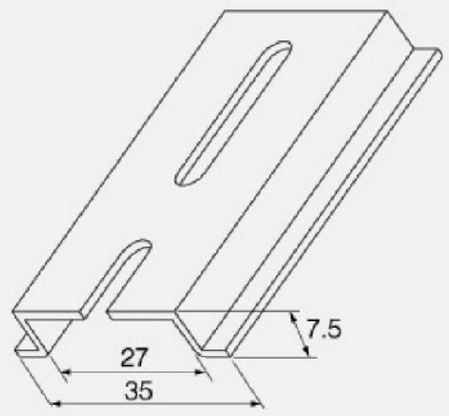
Dismantling