HQ Seals

Mechanical Seal

PRODUCT CATALOG

Professional To Provide Mechanical Seals Solutions




江苏华青流体科技有限公司
Jiangsu Huaqing Fluid Technology Co.,Ltd

Company Profile

For more than 30 years, Huaqing has specialized in the research, development, production, and sales of mechanical seals and auxiliary systems, including marine stern shaft seals. Our facilities cover over 20,000m^2 and are equipped with advanced manufacturing and testing equipment. Our products are widely used in sectors such as petroleum, chemical, power, medicine, and more. We also provide the design, manufacture, and service of non-standard products.

At Huaqing, we are committed to delivering top-notch mechanical sealing solutions at affordable prices and providing exceptional customer service. We welcome partners and clients from around the globe to collaborate with us.

CONTENTS

CONTENTS

BIA

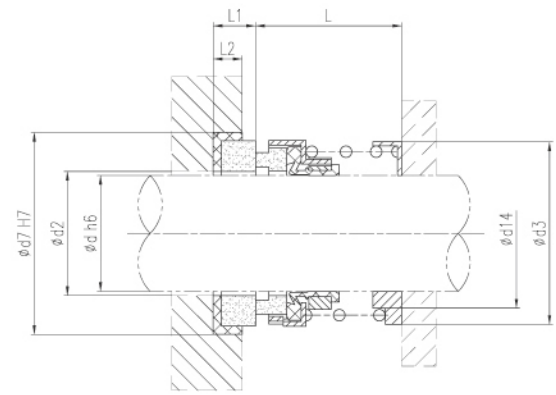

Advantages

- Self-adjust to shaft misalignment and deflection
- Allow the bellows to stretch and tighten

Design Features

- Internally mounted, internal-flow bellows single-end mechanical seal
- Complies with DIN 24960 standard
- Simple and compact structure, compatible with IS pumps

Application Range

- **Media:** Oil, water, weakly corrosive liquids
- **Pressure:** ≤1.0MPa
- **Temperature:** -20℃ to 150℃
- **Linear speed:** ≤10m/s

Dimensional Data

S.D.	dh6	d14	d2	d3	d7H7	L	L1	L2
14	14	22.4	17	27	30	18.7	5	4.5
16	16	23	18	28.5	32	21	5	4.5
18	18	25.5	21	30.5	35	22.5	7.5	6
20	20	26	24	31.8	35	21	8	6.5
25	25	34	27	39	40	25.5	8	6.5
28	28	36.5	30	42	43	25.5	8	6.5
30	30	38.5	32	44	45	25.5	9	7.5
32	32	40	34	46	48	33.5	9	7.5
33	33	40.5	35	47	48	33.5	9	7.5
35	35	42.5	37	49	50	33.5	9	7.5
38	38	46.5	40	54	56	33.5	9	7.5
40	40	48	42.5	56	58	33.5	9	7.5
43	43	51	45.5	59	61	36.5	9.5	8
45	45	52.5	47.5	61	63	38	9.5	8
48	48	55.5	50.5	64	66	38	9.5	8
50	50	57	52.5	66	70	38	9.5	8
53	53	60	55.5	69	73	41	9.5	8
55	55	62	57.5	71	75	41	9.5	8
58	58	68	60.5	78	78	42	9.5	8
60	60	70	62.5	80	80	42	9.5	8
70	70	80	73	90	92	45	11	9.5
80	80	90	83	104	104	55	12	10
85	85	95	88	108	109	64.2	12	10
90	90	100	93	113	114	66.2	12	10

FBD

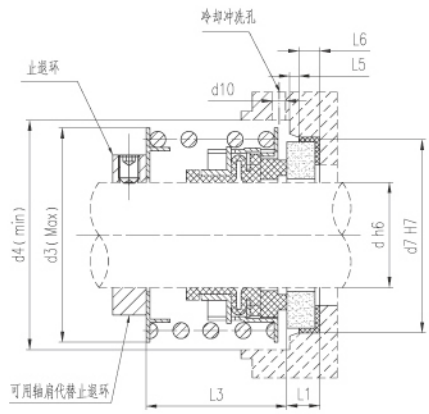

Advantages

- Simple design
- Suitable for mass-produced pump equipment
- Short axial installation dimensions

Design Features

- Rubber bellows design
- Single spring
- Independent of rotation direction

Application Range

- **Media:** Oil, water, and other weakly corrosive solutions
- **Pressure:** ≤1.4 MPa
- **Temperature:** -20℃ to 150℃
- **Linear speed:** ≤15 m/s

Dimensional Data

S.D.	d	d3	d4	d7	d10	L1	L3	L5	L6
16	16	34	37	30	5	8	25	1.5	6
18	18	36.8	40	32	5	8	25	2	6
20	20	38.8	42	34	5	8	25	2	6
22	22	41.5	45	36	5	8	25	2	6
25	25	44.8	48	39	5	8	26	2	6
28	28	48.5	52	43	5	8	26	2	6
30	30	52	55	48	5	8	26	2	7
35	35	57	60	53	5	10	30	2	8
40	40	67	70	58	5	10	34	2	8
45	45	73	76	63	5	10	36	2	8
50	50	79	81	68	8	10	41	2.5	8
55	55	84	87	73	8	12	41	2.5	10
60	60	90	95	79	8	12	41	2.5	10
65	65	98.5	104	86	8	12	49	2.5	10
70	70	103.5	109	91	8	12	52	2.5	10
75	75	110.5	116	96	8	12	52	2.5	10
80	80	120	125	105	11	14	56	3	12
85	85	125	130	110	11	14	56	3	12
90	90	132	137	115	11	14	56	3	12
95	95	137	142	120	11	14	56	3	12
100	100	144	149	125	11	14	62	3	12
110	110	157	162	135	11	16	62	3	14
120	120	169.5	175	145	11	16	72	3	14

UU4701

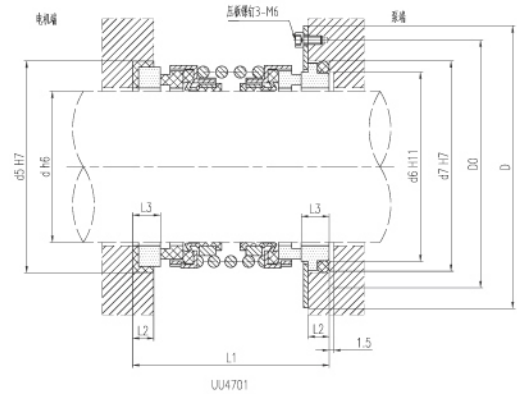

Advantages

- Back-to-back double end installation structure
- Easy to replace
- High inventory efficiency

Design Features

- Double end mechanical seal
- Unbalanced type
- Independent of rotation direction

Application Range

- **Media:** Sewage with solid particles and other general corrosive liquids
- **Pressure:** -0.05 to 0.3 MPa
- **Temperature:** -20℃ to 70℃
- **Linear speed:** ≤10 m/s

Dimensional Data

S.D.	dh6	d6	d5	d0	D	d7	L	L2	L3
14	14	24	30	38	50	30	39.5	4	5
16	16	25	32	40	52	32	40	4	5
18	18	28	35	45	55	35	45	6	7.5
20	20	29	35	50	60	35	49	6.5	8
22	22	31	37	52	63	37	49	6.5	8
24	24	33	39	54	65	39	49	6.5	8
25	25	34	40	60	72	40	51	6.5	8
28	28	37	43	61	73	43	51	6.5	8
30	30	39	45	65	82	45	59	6.5	8
32	32	42	48	68	84	48	61	6.5	8
33	33	42	48	69	86	48	61	7.5	9
35	35	44	50	75	94	50	61	7.5	9
38	38	49	56	80	97	56	61	7.5	9
40	40	51	58	82	100	58	64.5	7.5	9
43	43	54	61	85	103	61	65	8	9.5
45	45	56	63	87	105	63	65	8	9.5
48	48	59	66	89	106	66	65	8	9.5
50	50	62	70	93	109	70	69.5	8	9.5
53	53	65	73	96	112	73	69.5	8	9.5
55	55	67	75	98	114	75	71	8	9.5
58	58	70	78	101	117	78	71	8	9.5
60	60	72	80	105	124	80	74.5	8	9.5
63	63	75	83	109	127	83	74.5	8	9.5
65	65	77	85	112	130	85	79	9.5	11
68	68	81	90	115	132	90	79	9.5	11
70	70	83	92	117	135	92	79	9.5	11

HG9

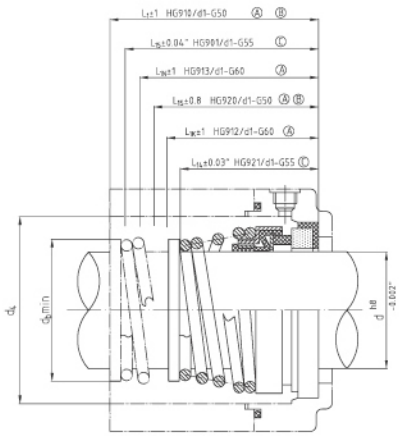

Advantages

- Universal Fit
- Space-Saving Design
- Enhanced Flexibility

Design Features

- Single end mechanical seal
- Unbalanced rubber bellows structure
- Complies with DIN24960 standard

Application Range

- **Media:** Cold water, hot water, beverages, weak acids and alkalis, media containing particles
- **Pressure:** ≤0.8 MPa
- **Temperature:** -20℃ to 140℃
- **Linear Speed:** ≤10 m/s

Dimensional Data

d	d6	d7	d14	d16	d4	db	L1	L1k	L1N	L15	L5	L6	L17	L28	L29
10	17	21	11.0	24.60	19.6	13.0	53.0	32.5	40	34.0	1.5	4	7.5	6.6	9.0
12	19	23	13.5	27.80	21.6	15.0	53.0	32.5	40	34.0	1.5	4	7.5	6.6	9.0
14	21	25	17.0	30.95	24.0	18.0	54.5	35.0	40	35.5	1.5	4	9.0	6.6	10.5
15	---	---	17.0	30.95	25.0	19.0	54.5	---	---	35.5	---	---	9.0	---	10.5
16	23	27	17.0	30.95	26.5	20.0	54.5	35.0	40	35.5	1.5	4	9.0	6.6	10.5
18	27	33	20.0	34.15	29.0	22.0	54.5	37.5	45	35.5	2.0	5	9.0	7.5	10.5
20	29	35	21.5	35.70	31.5	24.5	54.5	37.5	45	35.5	2.0	5	9.0	7.5	10.5
22	31	37	23.0	37.30	33.0	27.0	54.5	37.5	45	35.5	2.0	5	9.0	7.5	10.5
24	33	39	26.5	40.50	37.0	29.0	54.5	40.0	50	35.5	2.0	5	9.0	7.5	10.5
25	34	40	26.5	40.50	38.0	30.0	54.5	40.0	50	35.5	2.0	5	9.0	7.5	10.5
28	37	43	29.5	47.65	41.0	34.0	72.0	42.5	50	45.0	2.0	5	10.5	7.5	12.0
30	39	45	32.5	50.80	43.0	36.0	72.0	42.5	50	45.0	2.0	5	10.5	7.5	12.0
32	42	48	32.5	50.80	45.0	38.0	72.0	42.5	55	45.0	2.0	5	10.5	7.5	12.0
33	42	48	36.5	54.00	46.0	39.0	72.0	42.5	55	45.0	2.0	5	10.5	7.5	12.0
35	44	50	36.5	54.00	48.0	41.0	72.0	42.5	55	45.0	2.0	5	10.5	7.5	12.0
38	49	56	39.5	57.15	52.5	44.5	72.0	45.0	55	45.0	2.0	6	10.5	9.0	12.0
40	51	59	42.5	60.35	55.5	47.5	72.0	45.0	55	45.0	2.0	6	10.5	9.0	12.0

d	d6	d7	d14	d16	d4	db	L1	L1k	L1N	L15	L5	L6	L17	L28	L29
43	54	61	46.0	63.50	58.5	50.5	83.0	45.0	60	53.0	2.0	6	10.5	9.0	12.0
45	56	63	46.0	63.50	60.5	52.5	83.0	45.0	60	53.0	2.0	6	10.5	9.0	12.0
48	59	66	49.0	66.70	64.0	56.0	83.0	45.0	60	53.0	2.0	6	10.5	9.0	12.0
50	62	70	52.0	69.85	66.0	58.0	84.5	47.5	60	54.5	2.5	6	12.0	9.5	13.5
53	65	73	55.5	73.05	69.0	61.0	84.5	47.5	70	54.5	2.5	6	12.0	11.0	13.5
55	67	75	59.5	76.20	71.0	63.0	84.5	47.5	70	54.5	2.5	6	12.0	11.0	13.5
58	70	78	61.5	79.40	76.0	66.0	84.5	52.5	70	54.5	2.5	6	12.0	11.0	13.5
60	72	80	61.5	79.40	78.0	68.0	84.5	52.5	70	54.5	2.5	6	12.0	11.0	13.5
63	75	83	---	—	82.0	71.5	---	52.5	70	---	2.5	6	---	11.0	---
65	77	85	68.0	92.10	84.0	73.5	86.0	52.5	80	65.0	2.5	6	14.5	11.0	16.0
68	81	90	71.0	95.25	87.0	76.5	86.0	52.5	80	65.0	2.5	7	14.5	11.3	16.0
70	83	92	71.0	95.25	89.0	79.0	86.0	60.0	80	65.0	2.5	7	14.5	11.3	16.0
75	88	97	77.5	101.60	---	---	89.0	60.0	80	68.0	2.5	7	14.5	11.3	16.0
80	95	105	84.0	114.30	---	---	99.0	60.0	90	76.0	3.0	7	18.5	12.0	20.0
85	100	110	87.0	117.50	---	---	99.0	60.0	90	76.0	3.0	7	18.5	14.0	20.0
90	105	115	93.5	123.85	---	---	103.0	65.0	90	79.0	3.0	7	18.5	14.0	20.0
95	110	120	96.5	127.00	---	---	103.0	65.0	90	79.0	3.0	7	18.5	14.0	20.0
100	115	125	103.0	133.35	---	---	106.0	65.0	90	82.0	3.0	7	18.5	14.0	20.0

HQ3272

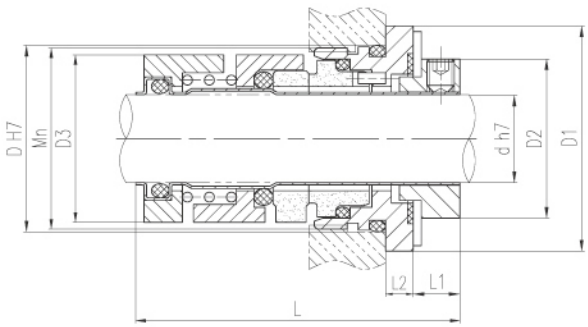

Advantages

- Suitable for various water treatment conditions
- Easy installation and operation

Design Features

- Designed for various imported multistage pumps
- Compact design with short dimensions

Application Range

- **Media:** Oil, water, sewage, and other general corrosive media containing certain particles
- **Pressure:** ≤1.6 MPa
- **Temperature:** -20℃ to 160℃
- **Linear speed:** ≤20 m/s

Dimensional Data

Model	d	D	D1	D2	D3	L	L1	L2	Mn
HQ3272-12	12	28.4	40.6	26	24.9	57	7	4	28*1.5
HQ3272-16	16	32.5	46.1	29	29	57	7	4	33*1.5

HQ502

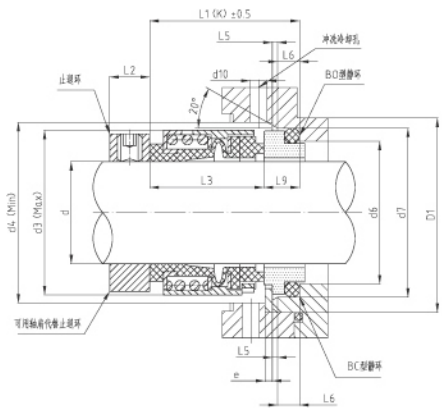

Advantages

- Wide range of applications
- Superior sealing performance
- Easy disassembly

Design Features

- Single spring rubber bellows structure
- Complies with European standard DIN 24960
- Can compensate for radial and axial shaft runout

Application Range

- **Media:** Oil, water, organic solvents, and other corrosive solutions
- **Pressure:** ≤4 MPa
- **Temperature:** -40°C to 200°C
- **speed:** ≤25 m/s

Dimensional Data

S.D.	d	d3	d4	d6	d7	d10	D1	e	L1(k)	L2	L3	L5	L6	L9
14	14	24	26	21	25	6.5	30	4	35.0	5.0	23.0	1.5	4	12.0
16	16	26	28	23	27	6.5	32	4	35.0	5.0	23.0	1.5	4	12.0
18	18	32	34	27	33	6.5	38	4	37.5	7.5	24.0	2.0	5	13.5
20	20	34	36	29	35	6.5	40	4	37.5	7.5	24.0	2.0	5	13.5
22	22	36	38	31	37	6.5	42	4	37.5	7.5	24.0	2.0	5	13.5
24	24	38	40	33	39	6.5	43	4	40.0	7.5	26.7	2.0	5	13.3
25	25	39	41	34	40	6.5	46	4	40.0	7.5	27.0	2.0	5	13.0
28	28	42	44	37	43	6.5	48	4	42.5	7.5	30.0	2.0	5	12.5
30	30	44	46	39	45	6.5	50	4	42.5	7.5	30.5	2.0	5	12.0
32	32	46	48	42	48	6.5	53	4	42.5	8.0	30.5	2.0	5	12.0
33	33	47	49	42	48	6.5	53	4	42.5	8.0	30.5	2.0	5	12.0
35	35	49	51	44	50	6.5	60	4	42.5	8.0	30.5	2.0	5	12.0
38	38	54	58	49	56	6.5	62	6	45.0	10.0	32.0	2.0	6	13.0
40	40	56	60	51	58	6.5	65	6	45.0	10.0	32.0	2.0	6	13.0
43	43	59	63	54	61	6.5	67	6	45.0	12.0	32.0	2.0	6	13.0
45	45	61	65	56	63	6.5	70	6	45.0	12.0	32.0	2.0	6	13.0
48	48	64	68	59	66	6.5	72	6	45.0	12.0	32.0	2.0	6	13.0
50	50	66	70	62	70	6.5	75	6	47.5	12.0	34.0	2.5	6	13.5
53	53	69	73	65	73	6.5	77	6	47.5	12.0	34.0	2.5	6	13.5
55	55	71	75	67	75	6.5	86	6	47.5	12.0	34.0	2.5	6	13.5
58	58	78	83	70	78	6.5	88	6	52.5	14.0	39.0	2.5	6	13.5
60	60	80	85	72	80	6.5	91	6	52.5	14.0	39.0	2.5	6	13.5
63	63	83	88	75	83	6.5	93	6	52.5	14.0	39.0	2.5	6	13.5
65	65	85	90	77	85	6.5	96	6	52.5	14.0	39.0	2.5	6	13.5
68	68	88	93	81	90	6.5	98	6	52.5	14.0	39.0	2.5	7	13.5
70	70	89	95	83	92	6.5	103	6	60.0	14.0	45.5	2.5	7	14.5
75	75	96	104	88	97	6.5	108	6	60.0	14.0	45.5	2.5	7	14.5
80	80	104	109	95	105	9.5	120	6	60.0	14.0	45.0	3.0	7	15.0
85	85	108	114	100	110	9.5	125	6	60.0	14.0	45.0	3.0	7	15.0
90	90	114	119	105	115	9.5	130	6	65.0	14.0	50.0	3.0	7	15.0
95	95	118	124	110	120	9.5	135	6	65.0	14.0	50.0	3.0	7	15.0
100	100	124	129	115	125	9.5	140	6	65.0	14.0	50.0	3.0	7	15.0

HU3

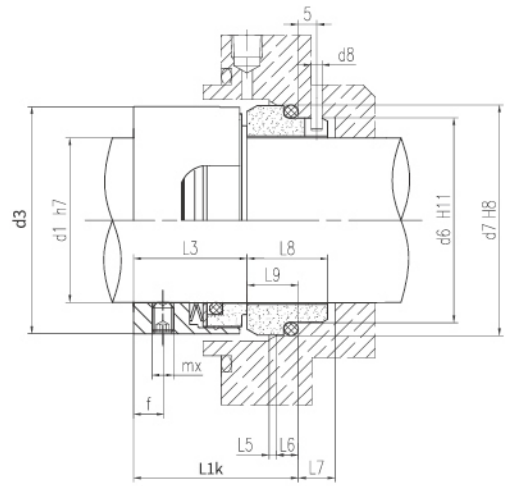

Advantages

- Wide range of material options
- Self-cleaning effect
- Flexible torque transmission
- Easy to replace

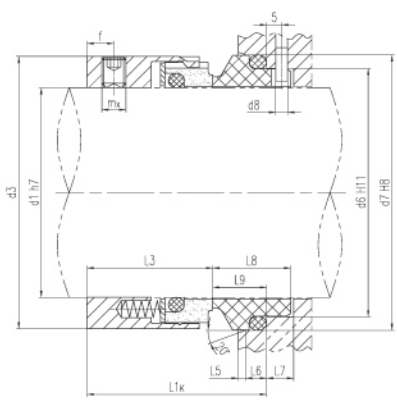

HU34

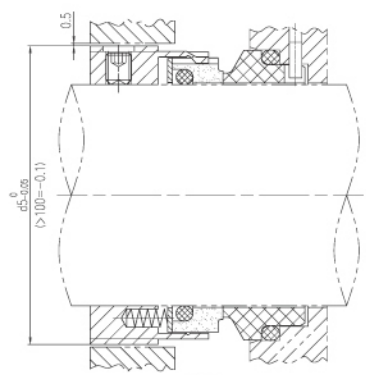

HU34F

Design Features

- Single end
- Unbalanced
- Independent of rotation direction
- Designed for EN12756

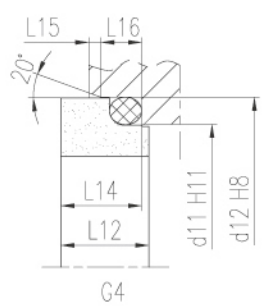

G4

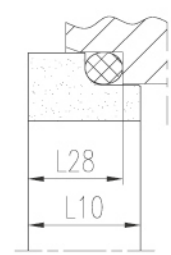

G6 DIN24960

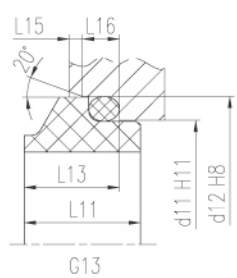

G13

Application Range

- **Media:** Oil, water, acids, alkalis, salts, and other general corrosive media
- **Pressure:** ≤1.6 MPa
- **Temperature:** -50℃ to 220℃
- **Linear speed:** ≤20 m/s

Dimensional Data

S.D.	d	d3	d6	d7	d8	d11	d12	d5	L1k	L3	L5	L6	L7	L8	L9	L10	L11	L12	L13	L14	L15	L16	L28	f	mx
14	14	25	21	25	3	20.5	24.6	34	35	25	1.5	4	8.5	17.5	10.0	7.5	10.0	6.5	7.6	5.6	1.2	3.8	6.6	6	M5
16	16	27	23	27	3	22	28	36	35	25	1.5	4	8.5	17.5	10.0	7.5	11.5	8.5	9.0	7.5	1.2	3.8	6.6	6	M5
18	18	33	27	33	3	24	30	38	37.5	26	2	5	9.0	19.5	11.5	8.5	12.5	9.0	10.0	8.0	1.5	5.0	7.5	7	M5
20	20	35	29	35	3	29.5	35	40	37.5	26	2	5	9.0	19.5	11.5	8.5	12.5	8.5	9.5	7.5	1.5	5.0	7.5	7	M5
22	22	37	31	37	3	29.5	35	42	37.5	26	2	5	9.0	19.5	11.5	8.5	12.5	8.5	9.5	7.5	1.5	5.0	7.5	7	M5
24	24	39	33	39	3	32	38	44	40	28.5	2	5	9.0	19.5	11.5	8.5	12.5	8.5	9.5	7.5	1.5	5.0	7.5	8	M5
25	25	40	34	40	3	32	38	45	40	28.5	2	5	9.0	19.5	11.5	8.5	12.5	8.5	9.5	7.5	1.5	5.0	7.5	8	M5
28	28	43	37	43	3	36	42	47	42.5	31	2	5	9.0	19.5	11.5	8.5	14.0	10.0	11.0	9.0	1.5	5.0	7.5	8	M6
30	30	45	39	45	3	39.2	45	49	42.5	31	2	5	9.0	19.5	11.5	8.5	14.0	11.5	11.0	10.5	1.5	5.0	7.5	8	M6
32	32	47	42	48	3	42.2	48	51	42.5	31	2	5	9.0	19.5	11.5	8.5	14.0	11.5	11.0	10.5	1.5	5.0	7.5	8	M6
33	33	48	42	48	3	44.2	50	51	42.5	31	2	5	9.0	19.5	11.5	8.5	14.5	12.0	11.5	10.5	1.5	5.0	7.5	8	M6
35	35	50	44	50	3	46.2	52	54	42.5	31	2	5	9.0	19.5	11.5	8.5	14.5	12.0	11.5	11.0	1.5	5.0	7.5	8	M6
38	38	55	49	56	4	49.2	55	59	45	31	2	6	9.0	22.0	14.0	10.0	14.5	11.3	11.5	10.3	1.5	5.0	9.0	8	M6
40	40	57	51	58	4	52.2	58	61	45	31	2	6	9.0	22.0	14.0	10.0	14.5	11.8	11.5	10.8	1.5	5.0	9.0	8	M6
43	43	60	54	61	4	53.3	62	65	45	31	2	6	9.0	22.0	14.0	10.0	17.0	13.2	14.3	12.0	2.0	6.0	9.0	8	M6
45	45	62	56	63	4	55.3	64	66	45	31	2	6	9.0	22.0	14.0	10.0	17.0	12.8	14.3	11.6	2.0	6.0	9.0	8	M6
48	48	65	59	66	4	59.7	68.4	69	45	31	2	6	9.0	22.0	14.0	10.0	17.0	12.8	14.3	11.6	2.0	6.0	9.0	8	M6
50	50	67	62	70	4	60.8	69.3	71	47.5	32.5	2.5	6	9.0	23.0	15.0	10.5	17.0	12.8	14.3	11.6	2.0	6.0	9.5	8	M6
53	53	70	65	73	4	63.8	72.3	75	47.5	32.5	2.5	6	9.0	23.0	15.0	12.0	17.0	13.5	14.3	12.3	2.0	6.0	11.0	8	M6
55	55	72	67	75	4	66.5	75.4	76	47.5	32.5	2.5	6	9.0	23.0	15.0	12.0	18.0	14.5	15.3	13.3	2.0	6.0	11.0	8	M6
58	58	79	70	78	4	69.5	78.4	83	52.5	37.5	2.5	6	9.0	23.0	15.0	12.0	18.0	14.5	15.3	13.3	2.0	6.0	11.0	9	M8
60	60	81	72	80	4	71.5	80.4	85	52.5	37.5	2.5	6	9.0	23.0	15.0	12.0	18.0	14.5	15.3	13.3	2.0	6.0	11.0	9	M8
63	63	84	75	83	4	74.5	83.4	88	52.5	37.5	2.5	6	9.0	23.0	15.0	12.0	18.0	14.2	15.3	13.3	2.0	6.0	11.0	9	M8
65	65	86	77	85	4	76.5	85.4	95	52.5	37.5	2.5	6	9.0	23.0	15.0	12.0	18.0	14.2	15.3	13.0	2.0	6.0	11.0	9	M8
68	68	89	81	90	4	82.7	91.5	93	52.5	34.5	2.5	7	9.0	26.0	18.0	12.5	19.0	14.9	16.0	13.7	2.0	6.0	11.3	9	M8
70	70	91	83	92	4	83	92	95	60	42	2.5	7	9.0	26.0	18.0	12.5	18.0	14.2	15.3	13.0	2.0	6.0	11.3	9	M8
75	75	99	88	97	4	90.2	99	105	60	42	2.5	7	9.0	26.0	18.0	12.5	18.0	15.2	15.3	14.8	2.0	6.0	11.3	10	M8
80	80	104	95	105	4	95.2	104	109	60	41.8	3	7	9.0	26.2	18.2	13.0	19.0	16.2	16.3	14.8	2.0	6.0	12.0	10	M8
85	85	109	100	110	4	100.2	109	114	60	41.8	3	7	9.0	26.2	18.2	15.0	19.0	16.0	16.3	14.8	2.0	6.0	14.0	10	M8
90	90	114	105	115	4	105.2	114	119	65	46.8	3	7	9.0	26.2	18.2	15.0	19.0	16.0	16.3	14.8	2.0	6.0	14.0	10	M8
95	95	119	110	120	4	111.6	120.3	124	65	47.8	3	7	9.0	25.2	17.2	15.0	20.0	17.0	17.3	15.8	2.0	6.0	14.0	10	M8
100	100	124	115	125	4	114.5	123.3	129	65	47.8	3	7	9.0	25.2	17.2	15.0	20.0	17.0	17.3	15.8	2.0	6.0	14.0	10	M8
105	105	138	112.2	134.3	5	---	---	143	67	47	2	10	9.0	30.0	20.0	---	---	---	---	---	---	---	---	10	M8
110	110	143	128.2	140.3	5	---	---	148	67	47	2	10	9.0	30.0	20.0	---	---	---	---	---	---	---	---	10	M8
115	115	148	136.2	148.3	5	---	---	153	67	47	2	10	---	30.0	20.0	---	---	---	---	---	---	---	---	10	M8
120	120	153	138.2	150.3	5	---	---	158	67	47	2	10	---	30.0	20.0	---	---	---	---	---	---	---	---	10	M8
125	125	158	142.2	154.3	5	---	---	163	67	47	2	10	---	30.0	20.0	---	---	---	---	---	---	---	---	10	M8
130	130	163	146.2	158.3	5	---	---	168	67	47	2	10	---	30.0	20.0	---	---	---	---	---	---	---	---	10	M8
135	135	168	152.2	164.3	5	---	---	173	67	47	2	10	---	30.0	20.0	---	---	---	---	---	---	---	---	10	M8
140	140	173	156.2	168.3	5	---	---	178	67	47	2	10	---	30.0	20.0	---	---	---	---	---	---	---	---	10	M8
145	145	178	161.2	173.3	5	---	---	183	67	47	2	10	---	30.0	20.0	---	---	---	---	---	---	---	---	10	M8
150	150	183	168.2	180.3	5	---	---	188	69	47	2	10	---	32.0	22.0	---	---	---	---	---	---	---	---	10	M8
155	155	191	173.2	185.3	5	---	---	196	80	56	2	12	---	34.0	24.0	---	---	---	---	---	---	---	---	12	M8
160	160	196	178.2	190.3	5	---	---	201	80	56	2	12	---	34.0	24.0	---	---	---	---	---	---	---	---	12	M8
165	165	201	183.2	195.3	5	---	---	206	80	56	2	12	---	34.0	24.0	---	---	---	---	---	---	---	---	12	M8
170	170	206	188.2	200.3	5	---	---	211	80	56	2	12	---	34.0	24.0	---	---	---	---	---	---	---	---	12	M8
175	175	211	193.2	205.3	5	---	---	216	80	56	2	12	---	34.0	24.0	---	---	---	---	---	---	---	---	12	M8
180	180	216	207.5	219.3	5	---	---	221	84	56	2	12	---	38.0	28.0	---	---	---	---	---	---	---	---	12	M8
185	185	221	212.5	224.3	5	---	---	226	84	56	2	12	---	38.0	28.0	---	---	---	---	---	---	---	---	12	M8
190	190	226	217.5	229.3	5	---	---	231	84	56	2	12	---	38.0	28.0	---	---	---	---	---	---	---	---	12	M8
195	195	231	222.5	234.3	5	---	---	236	84	56	2	12	---	38.0	28.0	---	---	---	---	---	---	---	---	12	M8
200	200	236	227.5	239.3	5	---	---	241	84	56	2	12	---	38.0	28.0	---	---	---	---	---	---	---	---	12	M8

HB3

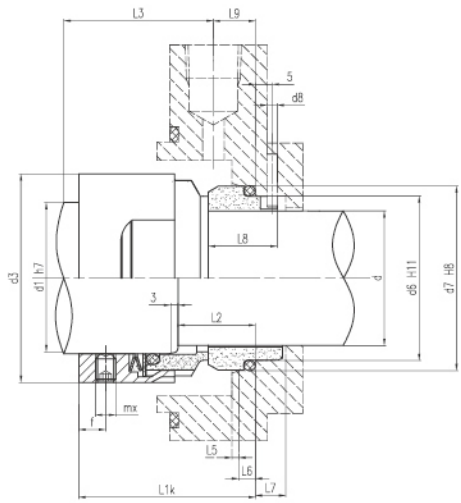

Advantages

- Standardized design
- Individual sealing
- Wide range of material options
- Minimal installation length

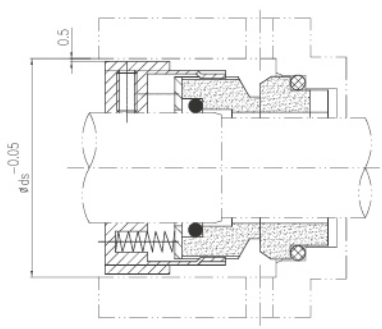

HB3F带螺纹泵

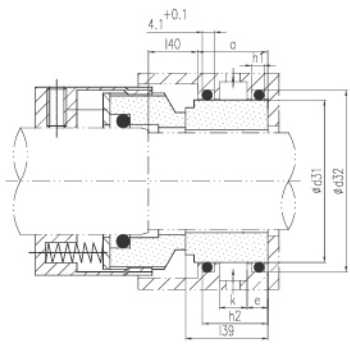

HB34-G115型

Design Features

- Single end
- Balanced type
- Independent of rotation direction
- Designed for EN 12756

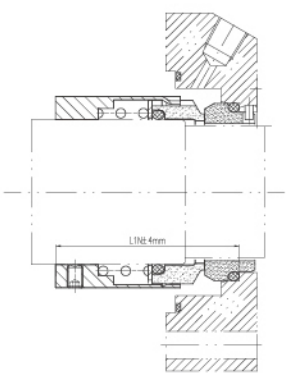

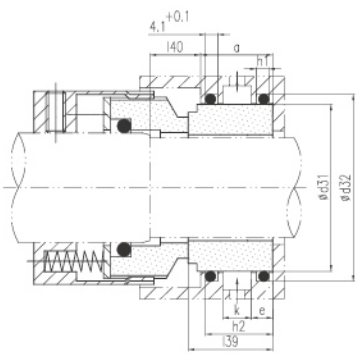

HB34-G115型

Application Range

- **Media:** Oil, water, acids, alkalis, salts, and other general corrosive media
- **Pressure:** ≤2.5 MPa
- **Temperature:** -50℃ to 220℃
- **Speed:** ≤20 m/s

Dimensional Data

S.D.	d	d1	d3	d6	d7	d	d24	d31	d32	ds	L1k	L1N	L2	L3	L5	L6	L7	L8	L9	L39	L40	a	b	e	f	h1	h2	k	mx	pma	t
14	14	18	33	21	25	3	20	---	---	38	42.5	---	18	32.5	1.5	4	8.5	17.5	10.0	---	---	---	5	---	6.0	---	---	---	M5	9	1.1
16	16	20	35	23	27	3	22	---	---	40	42.5	---	18	32.5	1.5	4	8.5	17.5	10.0	---	---	---	5	---	6.0	---	---	---	M5	9	1.1
18	18	22	37	27	33	3	24	---	---	42	45.0	55	20	33.5	2.0	5	9.0	19.5	11.5	---	---	---	6	---	7.0	---	---	---	M5	9	1.5
20	20	24	39	29	35	3	26	---	---	44	45.0	60	20	33.5	2.0	5	9.0	19.5	11.5	---	---	---	6	---	5.5	---	---	---	M5	9	1.5
22	22	26	41	31	37	3	28	---	---	45	45.0	60	20	33.5	2.0	5	9.0	19.5	11.5	---	---	---	6	---	8.0	---	---	---	M5	9	1.5
24	24	28	43	33	39	3	30	---	---	47	47.5	60	20	36.0	2.0	5	9.0	19.5	11.5	---	---	---	6	---	5.5	---	---	---	M6	9	1.5
25	25	30	45	34	40	3	32	---	---	49	47.5	60	20	36.0	2.0	5	9.0	19.5	11.5	---	---	---	6	---	5.5	---	---	---	M6	9	1.5
28	28	33	48	37	43	3	35	44.65	50.57	51	50.0	65	20	38.5	2.0	5	9.0	19.5	11.5	24.0	8.5	24	6	8.0	8.0	6.6	22.6	9	M6	12	1.5
30	30	35	50	39	45	3	37	47.83	53.75	54	50.0	65	20	38.5	2.0	5	9.0	19.5	11.5	24.5	9.0	24	6	8.0	8.0	6.6	22.6	9	M6	12	1.5
32	32	38	55	42	48	3	40	47.83	53.75	59	50.0	65	20	38.5	2.0	5	9.0	19.5	11.5	24.5	9.0	24	6	8.0	8.0	6.6	22.6	9	M6	12	1.5
33	33	38	55	42	48	3	40	47.83	53.75	59	50.0	65	20	38.5	2.0	5	9.0	19.5	11.5	24.5	9.0	24	6	8.0	8.0	6.6	22.6	9	M6	12	1.5
35	35	40	57	44	50	3	42	50.00	56.92	61	50.0	65	20	38.5	2.0	5	9.0	19.5	11.5	24.5	9.0	24	6	8.0	8.0	6.6	22.6	9	M6	12	1.5
38	38	43	60	49	56	4	45	54.18	60.10	65	52.5	75	23	38.5	2.0	6	9.0	22.0	14.0	26.0	11	24	6	8.0	8.0	6.6	22.6	9	M6	12	1.5
40	40	45	62	51	58	4	47	60.53	66.45	66	52.5	75	23	38.5	2.0	6	9.0	22.0	14.0	26.0	11	24	6	8.0	8.0	6.6	22.6	9	M6	12	1.5
43	43	48	65	54	61	4	50	63.70	69.62	69	52.5	75	23	38.5	2.0	6	9.0	22.0	14.0	26.0	11	24	6	8.0	8.0	6.6	22.6	9	M6	12	1.5
45	45	50	67	56	63	4	52	63.70	69.62	71	52.5	75	23	38.5	2.0	6	9.0	22.0	14.0	26.0	11	24	6	8.0	8.0	6.6	22.6	9	M6	12	1.5
48	48	53	70	59	66	4	55	66.88	72.80	75	52.5	85	23	38.5	2.0	6	9.0	22.0	14.0	26.0	11	24	6	8.0	8.0	6.6	22.6	9	M6	12	1.5
50	50	55	72	62	70	4	57	70.05	75.97	76	57.5	85	25	42.5	2.5	6	9.0	23.0	15.0	26.5	12.5	24	6	8.0	8.0	6.6	22.6	9	M6	12	1.5
53	53	58	79	65	73	4	60	76.40	82.32	83	57.5	85	25	42.5	2.5	6	9.0	23.0	15.0	26.5	12.5	24	8	8.0	9.0	6.6	22.6	9	M8	12	1.9
55	55	60	81	67	75	4	62	76.40	82.32	85	57.5	85	25	42.5	2.5	6	9.0	23.0	15.0	28.5	12.5	26	8	8.0	9.0	6.6	24.6	11	M8	12	1.9
58	58	63	84	70	78	4	65	79.58	85.50	88	62.5	85	25	47.5	2.5	6	9.0	23.0	15.0	28.5	12.5	26	8	8.0	9.0	6.6	24.6	11	M8	15	1.9
60	60	65	86	72	80	4	67	82.75	88.67	95	62.5	95	25	47.5	2.5	6	9.0	23.0	15.0	28.5	12.5	26	8	8.0	9.0	6.6	24.6	11	M8	15	1.9
63	63	68	89	75	83	4	70	85.93	91.85	93	62.5	95	25	47.5	2.5	6	9.0	23.0	15.0	28.5	12.5	26	8	8.0	9.0	6.6	24.6	11	M8	15	1.9
65	65	70	91	77	85	4	72	85.93	91.85	95	62.5	95	25	47.5	2.5	6	9.0	23.0	15.0	28.5	12.5	26	8	8.0	9.0	6.6	24.6	11	M8	15	1.9
70	70	75	99	83	92	4	77	89.10	95.02	105	70.0	95	28	52.0	2.5	7	9.0	26.0	18.0	30.5	14.5	26	8	8.0	10.0	6.6	24.6	11	M8	15	1.9
75	75	80	104	88	97	4	82	98.63	104.55	109	70.0	105	28	52.0	2.5	7	9.0	26.0	18.0	30.5	14.5	26	8	8.0	10.0	6.6	24.6	11	M8	15	1.9
80	80	85	109	95	105	4	87	101.80	107.72	114	70.0	105	28	51.8	3.0	7	9.0	26.2	18.2	30.2	14.0	26	8	8.0	10.0	6.6	24.6	11	M8	15	1.9
85	85	90	114	100	110	4	92	108.15	114.07	119	75.0	105	28	56.8	3.0	7	9.0	26.2	18.2	30.2	14.0	26	10	8.0	10.0	6.6	24.6	11	M8	23	2.3
90	90	95	119	105	115	4	97	114.50	120.42	124	75.0	105	28	56.8	3.0	7	9.0	26.2	18.2	30.2	14.0	26	10	8.0	10.0	6.6	24.6	11	M8	23	2.3
95	95	100	124	110	120	4	102	117.68	123.60	129	75.0	105	28	57.8	3.0	7	9.0	25.2	17.2	29.2	14.0	26	10	8.0	10.0	6.6	24.6	11	M8	23	2.3
100	100	105	129	115	125	4	107	124.03	129.95	134	75.0	105	28	57.8	3.0	7	9.0	25.2	17.2	29.2	14.0	26	10	8.0	10.0	6.6	24.6	11	M8	23	2.3
105	105	115	148	122.2	134.3	5	118	128.98	134.90	153	73.0	---	32	53.0	2.0	10	---	30.0	20.0	29.2	15.2	26	10	8.0	10.0	6.6	24.6	11	M8	18	2.3
110	110	120	153	128.2	140.3	5	123	135.30	141.20	158	73.0	---	32	53.0	2.0	10	---	30.0	20.0	32.5	14.5	30	10	9.5	10.0	6.6	28.6	13	M8	18	2.3
115	115	125	158	136.2	148.3	5	128	140.30	146.20	163	73.0	---	32	53.0	2.0	10	---	30.0	20.0	32.5	14.5	30	10	9.5	10.0	6.6	28.6	13	M8	18	2.3
120	120	130	163	138.2	150.3	5	133	145.30	151.20	168	73.0	---	32	53.0	2.0	10	---	30.0	20.0	32.5	14.5	30	10	9.5	10.0	6.6	28.6	13	M8	18	2.3
125	125	135	168	142.2	154.3	5	138	150.30	156.20	173	73.0	---	32	53.0	2.0	10	---	30.0	20.0	32.5	14.5	30	10	9.5	10.0	6.6	28.6	13	M8	18	2.3
130	130	140	173	146.2	158.3	5	143	155.30	161.20	178	73.0	---	32	53.0	2.0	10	---	30.0	20.0	32.5	14.5	30	10	9.5	10.0	6.6	28.6	13	M8	18	2.3
135	135	145	178	152.2	164.3	5	148	160.30	166.20	183	73.0	---	32	53.0	2.0	10	---	30.0	20.0	32.5	14.5	30	10	9.5	10.0	6.6	28.6	13	M8	18	2.3
140	140	150	183	156.2	168.3	5	153	165.30	171.20	188	73.0	---	32	53.0	2.0	10	---	30.0	20.0	32.5	14.5	30	10	9.5	10.0	6.6	28.6	13	M8	18	2.3
145	145	155	191	161.2	173.3	5	158	172.30	178.20	196	83.0	---	34	63.0	2.0	10	---	30.0	20.0	34.5	16.5	32	12.0	10.0	12.0	7.1	30.1	14	M8	22	2.1
150	150	160	196	168.2	180.3	5	163	177.30	183.20	201	85.0	---	36	63.0	2.0	10	---	32.0	22.0	34.5	16.5	32	12.0	10.0	12.0	7.1	30.1	14	M8	22	2.1
155	155	165	201	173.2	185.3	5	168	182.30	188.20	206	87.0	---	38	63.0	2.0	12	---	34.0	24.0	34.5	16.5	32	12.0	10.0	12.0	7.1	30.1	14	M8	22	2.1
160	160	170	206	178.2	190.3	5	173	187.30	193.20	211	87.0	---	38	63.0	2.0	12	---	34.0	24.0	34.5	16.5	32	12.0	10.0	12.0	7.1	30.1	14	M8	22	2.1
165	165	175	211	183.2	195.3	5	178	192.30	198.20	216	87.0	---	38	63.0	2.0	12	---	34.0	24.0	34.5	16.5	32	12.0	10.0	12.0	7.1	30.1	14	M8	22	2.1
170	170	180	216	188.2	200.3	5	183	197.30	203.20	221	87.0	---	38	63.0	2.0	12	---	34.0	24.0	37	16.5	34.5	12.0	10.0	12.0	7.1	32.1	16	M8	22	2.1
175	175	185	221	193.2	205.3	5	188	202.30	208.20	226	87.0	---	38	63.0	2.0	12	---	34.0	24.0	37	16.5	34.5	12.0	10.0	12.0	7.1	32.1	16	M8	22	2.1
180	180	190	226	207.5	219.3	5	193	207.30	213.20	231	91.0	---	42	63.0	2.0	12	---	38.0	28.0	37	16.5	34.5	12.0	10.0	12.0	7.1	32.1	16	M8	22	2.1
185	185	195	231	212.5	224.3	5	198	212.30	218.20	236	91.0	---	42	63.0	2.0	12	---	38.0	28.0	37	16.5	34.5	12.0	10.0	12.0	7.1	32.1	16	M8	22	2.1
190	190	200	236	217.5	229.3	5	203	217.30	223.20	241	91.0	---	42	63.0	2.0	12	---	38.0	28.0	37	16.5	34.5	12.0	10.0	12.0	7.1	32.1	16	M8	22	2.1
195	195	205	245	222.5	234.2	5	208	225.30	231.20	250	94.0	---	43	66.0	2.0	12	---	38.0	28.0	37	17.5	34.5	12.0	10.0	14.0	7.1	32.1	16	M10	22	2.1
200	200	210	250	227.5	239.3	5	213	230.30	236.20	255	94.0	---	43	66.0	2.0	12	---	38.0	28.0	37	17.5	34.5	12.0	10.0	14.0	7.1	32.1	16	M10	22	2.1

HUU803

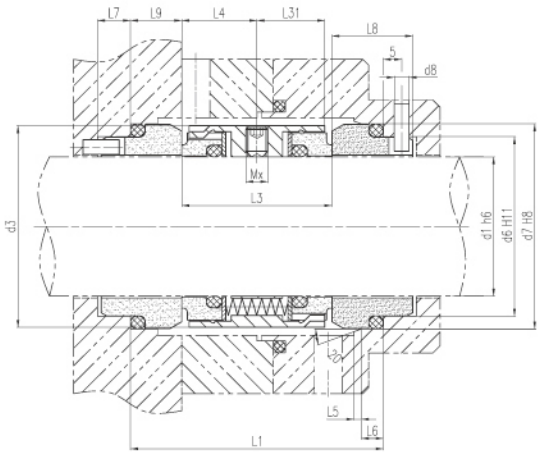

Advantages

- Insensitive to low solid content
- Wide range of material options
- Flexible torque transmission

Design Features

- Double end
- Multiple springs
- Unbalanced
- Independent of rotation direction

Application Range

- **Media:** Acids, alkalis, salts, seawater, gases, and other flammable, explosive, or toxic media
- **Pressure:** ≤1.6 MPa
- **Temperature:** -50℃ to 150℃
- **Linear Speed:** ≤20 m/s

Dimensional Data

S.D.	d1	d3	d6	d7	d8	d11	d12	L1	L3	L4	L5	L6	L7	L8	L9	L10	L11	L12	L13	L14	L15	L16	L28	L31	mx
18	18	33	27.0	33.0	3	24.0	30.0	61.0	38	19.0	2.0	5	9.0	19.5	11.5	8.5	12.5	9.0	10.0	8.0	1.5	5.0	7.5	17.0	M5
20	20	35	29.0	35.0	3	29.5	35.0	61.0	38	19.0	2.0	5	9.0	19.5	11.5	8.5	12.5	8.5	9.5	7.5	1.5	5.0	7.5	17.0	M5
22	22	37	31.0	37.0	3	29.5	35.0	61.0	38	19.0	2.0	5	9.0	19.5	11.5	8.5	12.5	8.5	9.5	7.5	1.5	5.0	7.5	17.0	M5
24	24	39	33.0	39.0	3	32.0	38.0	61.0	38	19.0	2.0	5	9.0	19.5	11.5	8.5	12.5	8.5	9.5	7.5	1.5	5.0	7.5	17.0	M5
25	25	40	34.0	40.0	3	32.0	38.0	61.0	38	19.0	2.0	5	9.0	19.5	11.5	8.5	12.5	8.5	9.5	7.5	1.5	5.0	7.5	17.0	M5
28	28	43	37.0	43.0	3	36.0	42.0	62.0	39	19.5	2.0	5	9.0	19.5	11.5	8.5	14.0	10.0	11.0	9.0	1.5	5.0	7.5	17.5	M6
30	30	45	39.0	45.0	3	39.2	45.0	62.0	39	19.5	2.0	5	9.0	19.5	11.5	8.5	14.0	11.5	11.0	10.5	1.5	5.0	7.5	17.5	M6
32	32	47	42.0	48.0	3	42.2	48.0	62.0	39	19.5	2.0	5	9.0	19.5	11.5	8.5	14.0	11.5	11.0	10.5	1.5	5.0	7.5	17.5	M6
33	33	48	42.0	48.0	3	44.2	50.0	62.0	39	19.5	2.0	5	9.0	19.5	11.5	8.5	14.5	12.0	11.5	10.5	1.5	5.0	7.5	17.5	M6
35	35	50	44.0	50.0	3	46.2	52.0	62.0	39	19.5	2.0	5	9.0	19.5	11.5	8.5	14.5	12.0	11.5	11.0	1.5	5.0	7.5	17.5	M6
38	38	55	49.0	56.0	4	49.2	55.0	69.0	41	20.5	2.0	6	9.0	22.0	14.0	10.0	14.5	11.3	11.5	10.3	1.5	5.0	9.0	18.5	M6
40	40	57	51.0	58.0	4	52.2	58.0	70.0	42	21.0	2.0	6	9.0	22.0	14.0	10.0	14.5	11.8	11.5	10.8	1.5	5.0	9.0	19.0	M6
43	43	60	54.0	61.0	4	53.3	62.0	70.0	42	21.0	2.0	6	9.0	22.0	14.0	10.0	17.0	13.2	14.3	12.0	2.0	6.0	9.0	19.0	M6
45	45	62	56.0	63.0	4	55.3	64.0	70.0	42	21.0	2.0	6	9.0	22.0	14.0	10.0	17.0	12.8	14.3	11.6	2.0	6.0	9.0	19.0	M6
48	48	65	59.0	66.0	4	59.7	68.4	70.0	42	21.0	2.0	6	9.0	22.0	14.0	10.0	17.0	12.8	14.3	11.6	2.0	6.0	9.0	19.0	M6
50	50	67	62.0	70.0	4	60.8	69.3	73.0	43	21.0	2.5	6	9.0	23.0	15.0	10.5	17.0	12.8	14.3	11.6	2.0	6.0	9.5	19.5	M6
53	53	70	65.0	73.0	4	63.8	72.3	73.0	43	21.5	2.5	6	9.0	23.0	15.0	12.0	17.0	13.5	14.3	12.3	2.0	6.0	11.0	19.5	M6
55	55	72	67.0	75.0	4	66.5	75.4	73.0	43	21.5	2.5	6	9.0	23.0	15.0	12.0	18.0	14.5	15.3	13.3	2.0	6.0	11.0	19.5	M8
58	58	79	70.0	78.0	4	69.5	78.4	86.0	56	28.0	2.5	6	9.0	23.0	15.0	12.0	18.0	14.5	15.3	13.3	2.0	6.0	11.0	23.5	M8
60	60	81	72.0	80.0	4	71.5	80.4	86.0	56	28.0	2.5	6	9.0	23.0	15.0	12.0	18.0	14.5	15.3	13.3	2.0	6.0	11.0	23.5	M8
63	63	84	75.0	83.0	4	74.5	83.4	85.0	55	27.5	2.5	6	9.0	23.0	15.0	12.0	18.0	14.2	15.3	13.3	2.0	6.0	11.0	24.5	M8
65	65	86	77.0	85.0	4	76.5	85.4	85.0	55	27.5	2.5	6	9.0	23.0	15.0	12.0	18.0	14.2	15.3	13.0	2.0	6.0	11.0	24.5	M8
68	68	89	81.0	90.0	4	82.7	91.5	91.0	55	27.5	2.5	7	9.0	26.0	18.0	12.5	19.0	14.9	16.0	13.7	2.0	6.0	11.3	24.5	M8
70	70	91	83.0	92.0	4	83.0	92.0	92.0	56	28.0	2.5	7	9.0	26.0	18.0	12.5	18.0	14.2	15.3	13.0	2.0	6.0	11.3	23.5	M8
75	75	99	88.0	97.0	4	90.2	99.0	92.0	56	28.0	2.5	7	9.0	26.0	18.0	12.5	18.0	15.2	15.3	14.0	2.0	6.0	11.3	25.5	M8
80	80	104	95.0	105.0	4	95.2	104.0	92.5	56	28.0	3.0	7	9.0	26.2	18.2	13.0	19.0	16.2	16.3	15.0	2.0	6.0	12.0	25.5	M8
85	85	109	100.0	110.0	4	100.2	109.0	92.5	56	28.0	3.0	7	9.0	26.2	18.2	15.0	19.0	16.0	16.3	14.8	2.0	6.0	14.0	25.0	M8
90	90	114	105.0	115.0	4	105.2	114.0	92.5	56	28.0	3.0	7	9.0	26.2	18.2	15.0	19.0	16.0	16.3	14.8	2.0	6.0	14.0	25.5	M8
95	95	119	110.0	120.0	4	111.6	120.3	90.5	56	28.0	3.0	7	9.0	25.2	17.2	15.0	20.0	17.0	17.3	15.8	2.0	6.0	14.0	25.0	M8
100	100	124	115.0	125.0	5	114.5	123.3	90.5	56	28.0	3.0	7	9.0	25.2	17.2	15.0	20.0	17.0	17.3	15.8	2.0	6.0	14.0	25.0	M8
105	105	138	122.2	134.3	5	---	---	108.0	68	34.0	2.0	10	9.0	30.0	20.0	---	---	---	---	---	---	---	---	30.5	M8
110	110	143	128.2	140.3	5	---	---	110.0	70	35.0	2.0	10	---	30.0	20.0	---	---	---	---	---	---	---	---	31.5	M8
115	115	148	136.2	148.3	5	---	---	110.0	70	35.0	2.0	10	---	30.0	20.0	---	---	---	---	---	---	---	---	31.5	M8
120	120	153	138.2	150.3	5	---	---	110.0	70	35.0	2.0	10	---	30.0	20.0	---	---	---	---	---	---	---	---	31.5	M8
125	125	158	142.2	154.3	5	---	---	110.0	70	35.0	2.0	10	---	30.0	20.0	---	---	---	---	---	---	---	---	31.5	M8
130	130	163	146.2	158.3	5	---	---	110.0	70	35.0	2.0	10	---	30.0	20.0	---	---	---	---	---	---	---	---	31.5	M8
135	135	168	152.2	164.3	5	---	---	110.0	70	35.0	2.0	10	---	30.0	20.0	---	---	---	---	---	---	---	---	31.5	M8
140	140	173	156.2	168.3	5	---	---	110.0	70	35.0	2.0	10	---	30.0	20.0	---	---	---	---	---	---	---	---	31.5	M8
145	145	178	161.2	173.3	5	---	---	110.0	70	35.0	2.0	10	---	30.0	20.0	---	---	---	---	---	---	---	---	31.5	M8
150	150	183	168.2	180.3	5	---	---	114.0	70	35.0	2.0	10	---	32.0	22.0	---	---	---	---	---	---	---	---	31.5	M8
155	155	191	173.2	185.3	5	---	---	127.0	79	39.5	2.0	12	---	34.0	24.0	---	---	---	---	---	---	---	---	35.5	M8
160	160	196	178.2	190.3	5	---	---	127.0	79	39.5	2.0	12	---	34.0	24.0	---	---	---	---	---	---	---	---	35.5	M8
165	165	201	183.2	195.3	5	---	---	127.0	79	39.5	2.0	12	---	34.0	24.0	---	---	---	---	---	---	---	---	35.5	M8
170	170	206	188.2	200.3	5	---	---	127.0	79	39.5	2.0	12	---	34.0	24.0	---	---	---	---	---	---	---	---	35.5	M8
175	175	211	193.2	205.3	5	---	---	127.0	79	39.5	2.0	12	---	34.0	24.0	---	---	---	---	---	---	---	---	35.5	M8
180	180	216	207.5	219.3	5	---	---	135.0	79	39.5	2.0	12	---	38.0	28.0	---	---	---	---	---	---	---	---	35.5	M8
185	185	221	212.5	224.3	5	---	---	135.0	79	39.5	2.0	12	---	38.0	28.0	---	---	---	---	---	---	---	---	35.5	M8
190	190	226	217.5	229.3	5	---	---	135.0	79	39.5	2.0	12	---	38.0	28.0	---	---	---	---	---	---	---	---	35.5	M8
195	195	231	222.5	234.3	5	---	---	135.0	79	39.5	2.0	12	---	38.0	28.0	---	---	---	---	---	---	---	---	35.5	M8
200	200	236	227.5	239.3	5	---	---	135.0	79	39.5	2.0	12	---	38.0	28.0	---	---	---	---	---	---	---	---	35.5	M8

HBB803

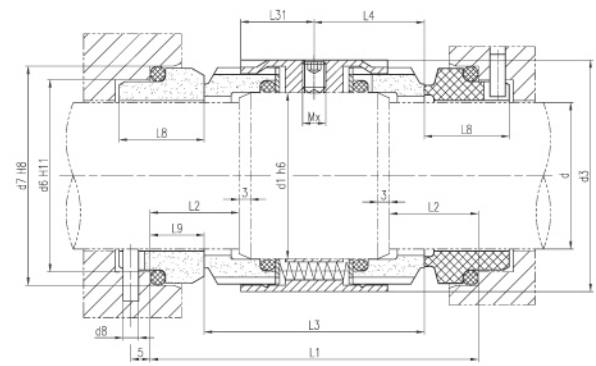

Advantages

- Insensitive to low solid content
- Wide range of material options
- Flexible torque transmission

Design Features

- Double end
- Multiple springs
- Balanced type
- Independent of rotation direction

Application Range

- **Media:** Liquid hydrocarbons (methane, ethane, etc), liquid oxygen, liquefied natural gas
- **Pressure:** ≤2.5 MPa
- **Temperature:** -50℃ to 150℃
- **Linear speed:** ≤20 m/s

Dimensional Data

S.D.	d	d1	d3	d6	d7	d8	L1	L2	L3	L4	L5	L6	L7	L8	L9	L31	mx
14	14	18	33	21	25	3	73.0	18	53	26.5	1.5	4	8.5	17.5	10.0	17	M5
16	16	20	35	23	27	3	73.0	18	53	26.5	1.5	4	8.5	17.5	10.0	17	M5
18	18	22	37	27	33	3	76.0	20	53	26.5	2	5	9	19.5	11.5	17	M5
20	20	24	39	29	35	3	76.0	20	53	26.5	2	5	9	19.5	11.5	17	M5
22	22	26	41	31	37	3	76.0	20	53	26.5	2	5	9	19.5	11.5	17	M5
24	24	28	43	33	39	3	77.0	20	54	27	2	5	9	19.5	11.5	17.5	M6
25	25	30	45	34	40	3	77.0	20	54	27	2	5	9	19.5	11.5	17.5	M6
28	28	33	48	37	43	3	77.0	20	54	27	2	5	9	19.5	11.5	17.5	M6
30	30	35	50	39	45	3	77.0	20	54	27	2	5	9	19.5	11.5	17.5	M6
32	32	38	55	42	48	3	79.0	20	56	28	2	5	9	19.5	11.5	18.5	M6
33	33	38	55	42	48	3	79.0	20	56	28	2	5	9	19.5	11.5	18.5	M6
35	35	40	57	44	50	3	80.0	20	57	28.5	2	5	9	19.5	11.5	19	M6
38	38	43	60	49	56	4	85.0	23	57	28.5	2	6	9	22	14	19	M6
40	40	45	62	51	58	4	85.0	23	57	28.5	2	6	9	22	14	19	M6
43	43	48	65	54	61	4	85.0	23	57	28.5	2	6	9	22	14	19	M6
45	45	50	67	56	63	4	84.0	23	56	28	2	6	9	22	14	19.5	M6
48	48	53	70	59	66	4	84.0	23	56	28	2	6	9	22	14	19.5	M6
50	50	55	72	62	70	4	93.0	25	63	31.5	2.5	6	9	23	15	19.5	M8
53	53	58	79	65	73	4	97.0	25	67	33.5	2.5	6	9	23	15	23.5	M8
55	55	60	81	67	75	4	97.0	25	67	33.5	2.5	6	9	23	15	23.5	M8
58	58	63	84	70	78	4	104.0	25	74	37	2.5	6	9	23	15	24.5	M8
60	60	65	86	72	80	4	104.0	25	74	37	2.5	6	9	23	15	24.5	M8
63	63	68	89	75	83	4	109.0	25	79	39.5	2.5	6	9	23	15	24.5	M8
65	65	70	91	77	85	4	98.0	25	68	34	2.5	6	9	23	15	23.5	M8
70	70	75	99	83	92	4	112.5	28	76.4	38.2	2.5	7	9	26	18	25.5	M8
75	75	80	104	88	97	4	112.5	28	76.4	38.2	2.5	7	9	26	18	25.5	M8

S.D.	d	d1	d3	d6	d7	d8	L1	L2	L3	L4	L5	L6	L7	L8	L9	L31	mx
80	80	85	109	95	105	4	112.5	28	76	38	3	7	9	26.2	18.2	25	M8
85	85	90	114	100	110	4	112.5	28	76	38	3	7	9	26.2	18.2	25.5	M8
90	90	95	119	105	115	4	112.5	28	76	38	3	7	9	26.2	18.2	25	M8
95	95	100	124	110	120	4	110.5	28	76	38	3	7	9	25.2	17.2	25	M8
100	100	105	129	115	125	4	122.0	28	76	38	3	7	9	25.2	17.2	25.5	M8
105	105	115	148	122.2	134.3	5	122.0	32	82	41	2	10	---	30	20	31.5	M8
110	110	120	153	128.2	140.3	5	122.0	32	82	41	2	10	---	30	20	31.5	M8
115	115	125	158	136.2	148.3	5	122.0	32	82	41	2	10	---	30	20	31.5	M8
120	120	130	163	138.2	150.3	5	122.0	32	82	41	2	10	---	30	20	31.5	M8
125	125	135	168	142.2	154.3	5	122.0	32	82	41	2	10	---	30	20	31.5	M8
130	130	140	173	146.2	158.3	5	122.0	32	82	41	2	10	---	30	20	31.5	M8
135	135	145	178	152.2	164.3	5	122.0	32	82	41	2	10	---	30	20	31.5	M8
140	140	150	183	156.2	168.3	5	133.0	32	82	41	2	10	---	30	20	31.5	M8
145	145	155	191	161.2	173.3	5	137.0	34	93	46.5	2	10	---	30	20	35.5	M8
150	150	160	196	168.2	180.3	5	141.0	36	93	46.5	2	10	---	32	22	35.5	M8
155	155	165	201	173.2	185.3	5	141.0	38	93	46.5	2	12	---	34	24	35.5	M8
160	160	170	206	178.2	190.3	5	141.0	38	93	46.5	2	12	---	34	24	35.5	M8
165	165	175	211	183.2	195.3	5	141.0	38	93	46.5	2	12	---	34	24	35.5	M8
170	170	180	216	188.2	200.3	5	141.0	38	93	46.5	2	12	---	34	24	35.5	M8
175	175	185	221	193.2	205.3	5	149.0	38	93	46.5	2	12	---	34	24	35.5	M8
180	180	190	226	207.5	219.3	5	149.0	42	93	46.5	2	12	---	38	28	35.5	M8
185	185	195	231	212.5	224.3	5	149.0	42	93	46.5	2	12	---	38	28	35.5	M8
190	190	200	236	217.5	229.3	5	151.0	42	93	46.5	2	12	---	38	28	35.5	M8
195	195	205	245	222.5	234.3	5	151.0	43	95	47.5	2	12	---	38	28	---	M10
200	200	210	250	227.5	239.3	5	151.0	43	95	47.5	2	12	---	38	28	---	M10

HQ58U

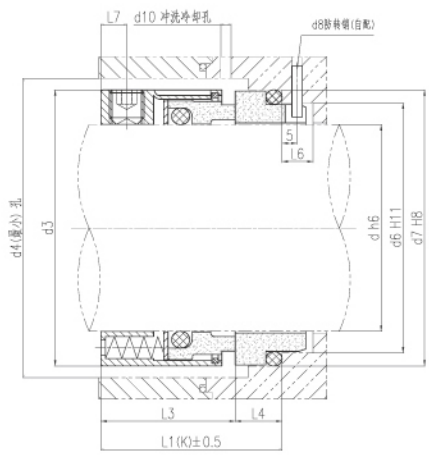

Advantages

- Wedge rings made of PTFE serve as auxiliary rings for both rotating and stationary faces

Design Features

- Rubber O-rings as dynamic and static auxiliary sealing rings
- Single end, multiple spring unbalanced structure
- Compact design with small axial dimensions

Application Range

- **Media:** Oil, water, organic solvents, and other corrosive solutions
- **Pressure:** ≤1.6 MPa
- **Temperature:** -50℃ to 220℃
- **Linear speed:** ≤25 m/s

Dimensional Data

S.D.	d	d3	d4	d6	d7	d8	d10	L1k	L3	L4	L6	L7
14	14	24	26	21	25	2	6.5	35.0	23.0	12.0	8.5	4.0
16	16	26	28	23	27	2	6.5	35.0	23.0	12.0	8.5	4.0
18	18	32	34	27	33	3	6.5	37.5	24.0	13.5	9.0	5.0
20	20	34	36	29	35	3	6.5	37.5	24.0	13.5	9.0	5.0
22	22	36	38	31	37	3	6.5	37.5	24.0	13.5	9.0	5.0
24	24	38	40	33	39	3	6.5	40.0	26.7	13.3	9.0	5.0
25	25	39	41	34	40	3	6.5	40.0	27.0	13.0	9.0	5.0
28	28	42	44	37	43	3	6.5	42.5	30.0	12.5	9.0	7.5
30	30	44	46	39	45	3	6.5	42.5	30.5	12.0	9.0	7.5
32	32	46	48	42	48	3	6.5	42.5	30.5	12.0	9.0	7.5
33	33	47	49	42	48	3	6.5	42.5	30.5	12.0	9.0	6.5
35	35	49	51	44	50	3	6.5	42.5	30.5	12.0	9.0	6.5
38	38	54	58	49	56	4	6.5	45.0	32.0	13.0	9.0	8.0
40	40	56	60	51	58	4	6.5	45.0	32.0	13.0	9.0	8.0
43	43	59	63	54	61	4	6.5	45.0	32.0	13.0	9.0	8.0
45	45	61	65	56	63	4	6.5	45.0	32.0	13.0	9.0	8.0

S.D.	d	d3	d4	d6	d7	d8	d10	L1k	L3	L4	L6	L7
48	48	64	68	59	66	4	6.5	45.0	32.0	13.0	9.0	5.5
50	50	66	70	62	70	4	6.5	47.5	34.0	13.5	9.0	6.5
53	53	69	73	65	73	4	6.5	47.5	34.0	13.5	9.0	5.5
55	55	71	75	67	75	4	6.5	47.5	34.0	13.5	9.0	5.5
58	58	78	83	70	78	4	6.5	52.5	39.0	13.5	9.0	7.5
60	60	80	85	72	80	4	6.5	52.5	39.0	13.5	9.0	7.5
63	63	83	88	75	83	4	6.5	52.5	39.0	13.5	9.0	7.5
65	65	85	90	77	85	4	6.5	52.5	39.0	13.5	9.0	7.5
68	67	88	93	81	90	4	6.5	52.5	39.0	13.5	9.0	7.5
70	70	90	95	83	92	4	6.5	60.0	45.5	14.5	9.0	7.5
75	75	95	104	88	97	4	6.5	60.0	45.5	14.5	9.0	7.8
80	80	104	109	95	105	4	9.5	60.0	45.0	15.0	9.0	7.8
85	85	109	114	100	110	4	9.5	60.0	45.0	15.0	9.0	7.8
90	90	114	119	105	115	4	9.5	65.0	50.0	15.0	9.0	7.8
95	95	119	124	110	120	4	9.5	65.0	50.0	15.0	9.0	7.8
100	100	124	129	115	125	4	9.5	65.0	50.0	15.0	9.0	7.8

HQ58B

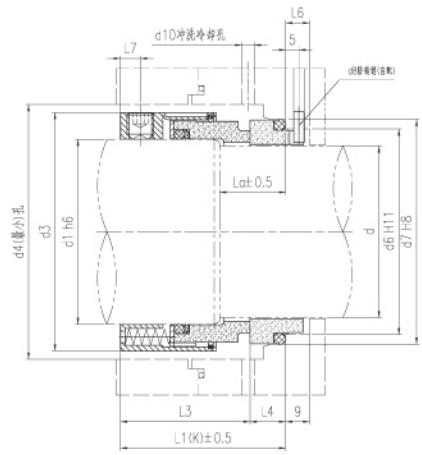

Advantages

- Standardized design
- Individualized sealing solutions
- Extensive material options
- Minimized installation length

Design Features

- Rubber O-rings for static/dynamic ring secondary sealing
- Single cartridge, multi-spring balanced design
- Compact axial dimensions with space-saving construction

Application Range

- **Media:** Oils, water, organic solvents, and corrosive solutions
- **Pressure:** ≤2.5 MPa
- **Temperature:** -50°C to 220°C
- **Linear speed:** ≤25 m/s

Dimensional Data

S.D.	d	d1	d3	d4	d6	d7	d8	d10	L1k	L3	L4	L6	L7	La
14	14	18	32	34	21	25	3	6.5	42.5	30.5	12	8.5	5	18
16	16	20	34	36	23	27	3	6.5	42.5	30.5	12	8.5	5	18
18	18	22	36	38	27	33	3	6.5	45	31.5	13.5	9	5	20
20	20	24	38	40	29	35	3	6.5	45	31.5	13.5	9	5	20
22	22	26	40	42	31	37	3	6.5	45	31.5	13.5	9	5	20
24	24	28	42	44	33	39	3	6.5	47.5	34.2	13.3	9	7.5	20
25	25	30	44	46	34	40	3	6.5	47.5	34.5	13	9	7.5	20
28	28	33	47	49	37	43	3	6.5	50	37.5	12.5	9	6.5	20
30	30	35	49	51	39	45	3	6.5	50	38	12	9	6.5	20
32	32	38	54	58	42	48	3	6.5	50	38	12	9	8	20
33	33	38	54	58	42	48	3	6.5	50	38	12	9	8	20
35	35	40	56	60	44	50	3	6.5	50	38	12	9	8	20
38	38	43	59	63	49	56	4	6.5	52.5	39.5	13	9	8	23
40	40	45	61	65	51	58	4	6.5	52.5	39.5	13	9	8	23
43	43	48	64	68	54	61	4	6.5	52.5	39.5	13	9	5.5	23

S.D.	d	d1	d3	d4	d6	d7	d8	d10	L1k	L3	L4	L6	L7	La
45	45	50	66	70	56	63	4	6.5	52.5	39.5	13	9	6.5	23
48	48	53	69	73	59	66	4	6.5	52.5	39.5	13	9	5.5	23
50	50	55	71	75	62	70	4	6.5	57.5	44	13.5	9	5.5	25
53	53	58	78	83	65	73	4	6.5	57.5	44	13.5	9	7.5	25
55	55	60	80	85	67	75	4	6.5	57.5	44	13.5	9	7.5	25
58	58	63	83	88	70	78	4	6.5	62.5	49	13.5	9	7.5	25
60	60	65	85	90	72	80	4	6.5	62.5	49	13.5	9	7.5	25
63	63	68	88	93	75	83	4	6.5	62.5	49	13.5	9	7.5	25
65	65	70	90	95	77	85	4	6.5	62.5	49	13.5	9	7.5	25
70	70	75	95	104	83	92	4	6.5	70	55.5	14.5	9	7.8	28
75	75	80	104	109	88	97	4	6.5	70	55.5	14.5	9	7.8	28
80	80	85	109	114	95	105	4	9.5	70	55	15	9	7.8	28
85	85	90	114	119	100	110	4	9.5	75	60	15	9	7.8	28
90	90	95	119	124	105	115	4	9.5	75	60	15	9	7.8	28
95	95	100	124	129	110	120	4	9.5	75	60	15	9	7.8	28
100	100	105	129	134	115	125	4	9.5	75	60	15	9	7.8	28

HUOT

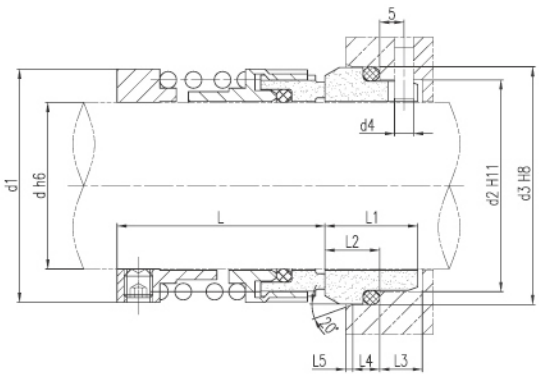

Advantages

- Forked structure ensures reliable transmission

Design Features

- Single end
- Unbalanced type
- Suitable for any rotation direction
- Large spring structure

Application Range

- **Media:** Oil, water, organic solvents, and other corrosive solutions
- **Pressure:** ≤1 MPa
- **Temperature:** -50℃ to 220℃
- **Linear speed:** ≤15 m/s

Dimensional Data

S.D.	d	d1	d2	d3	d4	L	L1	L2	L3	L4	L5
18	18	32	27	33	3	33.5	19.5	11.5	9	5	2
20	20	34	29	35	3	33.5	19.5	11.5	9	5	2
22	22	36	31	37	3	33.5	19.5	11.5	9	5	2
24	24	38	33	39	3	38.5	19.5	11.5	9	5	2
25	25	39	34	40	3	38.5	19.5	11.5	9	5	2
28	28	42	37	43	3	38.5	19.5	11.5	9	5	2
30	30	44	39	45	3	38.5	19.5	11.5	9	5	2
32	32	46	42	48	3	43.5	19.5	11.5	9	5	2
33	33	47	42	48	3	43.5	19.5	11.5	9	5	2
35	35	49	44	50	3	43.5	19.5	11.5	9	5	2
38	38	54	49	56	4	41.0	22.0	14.0	9	6	2
40	40	56	51	58	4	41.0	22.0	14.0	9	6	2
43	43	59	54	61	4	46.0	22.0	14.0	9	6	2
45	45	61	56	63	4	46.0	22.0	14.0	9	6	2
48	48	64	59	66	4	46.0	22.0	14.0	9	6	2

S.D.	d	d1	d2	d3	d4	L	L1	L2	L3	L4	L5
50	50	66	62	70	4	45.0	23.0	15.0	9	6	2.5
53	53	69	65	73	4	55.0	23.0	15.0	9	6	2.5
55	55	71	67	75	4	55.0	23.0	15.0	9	6	2.5
58	58	78	70	78	4	55.0	23.0	15.0	9	6	2.5
60	60	80	72	80	4	55.0	23.0	15.0	9	6	2.5
63	63	83	75	83	4	55.0	23.0	15.0	9	6	2.5
65	65	85	77	85	4	65.0	23.0	15.0	9	6	2.5
68	68	88	81	90	4	62.0	26.0	18.0	9	7	2.5
70	70	90	83	92	4	62.0	26.0	18.0	9	7	2.5
75	75	99	88	97	4	62.0	26.0	18.0	9	7	2.5
80	80	104	95	105	4	71.8	26.2	18.2	9	7	3
85	85	109	100	110	4	71.8	26.2	18.2	9	7	3
90	90	114	105	115	4	71.8	26.2	18.2	9	7	3
95	95	119	110	120	4	72.8	25.2	17.2	9	7	3
100	100	124	115	125	4	72.8	25.2	17.2	9	7	3

HQCT-SE

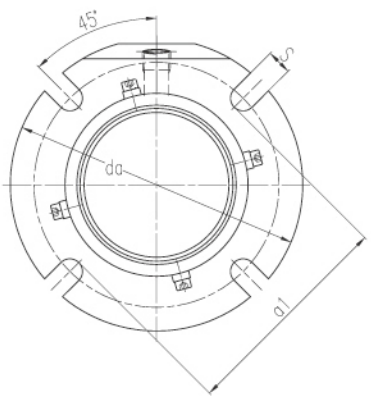

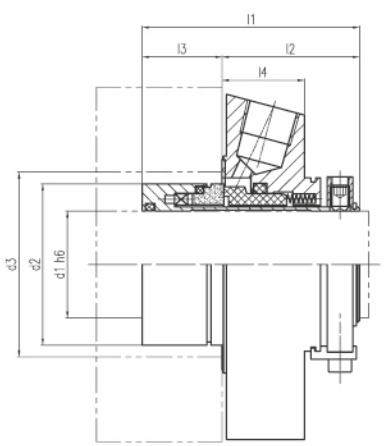

HQCT-SE

HQCT-DE

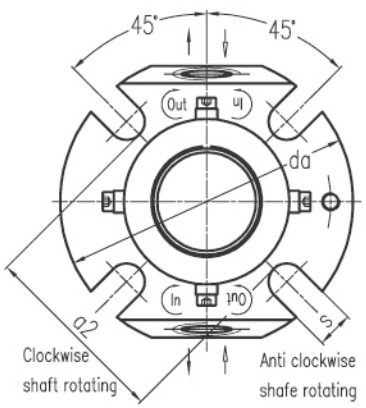

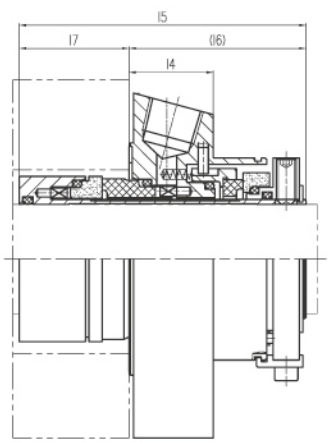

HQCT-DE

Advantages

- Standardized seals
- Can replace packing seals
- Small radial installation dimensions
- Customer specific versions available

Design Features

- Cartridge type
- Equipped with flush ports or non-pressurized quench

Application Range

- **Pressure:** ≤1.2 MPa
- **Temperature:** -40°C to 200°C
- **Linear speed:** ≤10 m/s

Dimensional Data

d1	d2	d3min	d3max	L1	L2	L3	L4	L5	L6	L7	L12	L13	L14	L15	L16	L17	a1	a2	da	S
25	43.0	44.0	51.5	67	42.4	24.6	25.4	86.5	53.4	33.1	35.0	32.0	17.5	79.5	53.4	26.1	62	62	105	13.2
28	46.0	47.0	52.0	67	42.4	24.6	25.4	86.5	53.4	33.1	35.0	32.0	17.5	79.5	53.4	26.1	62	65	105	13.2
30	48.0	49.0	56.0	67	42.4	24.6	25.4	86.5	53.4	33.1	35.0	32.0	17.5	79.5	53.4	26.1	65	67	105	13.2
32	49.8	51.0	57.0	67	42.4	24.6	25.4	86.5	53.4	33.1	35.0	32.0	17.5	79.5	53.4	26.1	67	70	108	13.2
33	49.8	51.0	57.0	67	42.4	24.6	25.4	86.5	53.4	33.1	35.0	32.0	17.5	79.5	53.4	26.1	67	70	108	13.2
35	53.0	54.0	61.5	67	42.4	24.6	25.4	86.5	53.4	33.1	35.0	32.0	17.5	79.5	53.4	26.1	70	72	113	13.2
38	56.0	57.0	66.0	67	42.4	24.6	25.4	86.5	53.4	33.1	35.0	32.0	17.5	79.5	53.4	26.1	75	75	123	13.2
40	58.0	59.0	68.0	67	42.4	24.6	25.4	86.5	53.4	33.1	35.0	32.0	17.5	79.5	53.4	26.1	75	77	123	14.2
42	60.5	61.5	69.5	67	42.4	24.6	25.4	86.5	53.4	33.1	35.0	32.0	17.5	79.5	53.4	26.1	80	80	133	14.2
43	60.5	61.5	70.5	67	42.4	24.6	25.4	86.5	53.4	33.1	35.0	32.0	17.5	79.5	53.4	26.1	80	80	133	14.2
45	62.5	64.0	73.0	67	42.4	24.6	25.4	86.5	53.4	33.1	35.0	32.0	17.5	79.5	53.4	26.1	81	82	138	14.2
48	65.6	67.0	75.0	67	42.4	24.6	25.4	86.5	53.4	33.1	35.0	32.0	17.5	79.5	53.4	26.1	84	85	138	14.2
50	68.0	69.0	78.0	67	42.4	24.6	25.4	86.5	53.4	33.1	35.0	32.0	17.5	79.5	53.4	26.1	87	87	148	14.2
53	71.0	73.0	87.0	67	42.4	24.6	25.4	86.5	53.4	33.1	35.0	32.0	17.5	79.5	53.4	26.1	97	97	148	18.0
55	73.0	74.0	83.0	67	42.4	24.6	25.4	86.5	53.4	33.1	35.0	32.0	17.5	79.5	53.4	26.1	90	92	148	18.0
60	78.0	79.0	91.0	67	42.4	24.6	25.4	86.5	53.4	33.1	35.0	32.0	17.5	79.5	53.4	26.1	102	102	157	18.0
65	84.8	85.7	98.5	67	42.4	24.6	25.4	86.5	53.4	33.1	35.0	32.0	17.5	79.5	53.4	26.1	109	109	163	18.0
70	93.0	95.0	108.0	67	42.4	24.6	25.4	86.5	53.4	33.1	35.0	32.0	17.5	79.5	53.4	26.1	118	118	178	18.0
75	100.0	101.6	118.0	84	57.4	26.6	28.0	108.0	63.9	44.1	46.1	37.9	22.0	---	---	---	129	129	190	18.0
80	106.4	108.0	124.0	84	57.4	26.6	28.0	108.0	63.9	44.1	46.1	37.9	22.0	---	---	---	135	135	195	18.0
85	109.5	111.1	128.0	84	57.4	26.6	28.0	108.0	63.9	44.1	46.1	37.9	22.0	---	---	---	139	139	198	22.0
90	115.9	117.5	135.0	84	57.4	26.6	28.0	108.0	63.9	44.1	46.1	37.9	22.0	---	---	---	145	145	205	22.0
95	119.1	120.7	138.0	84	57.4	26.6	28.0	108.0	63.9	44.1	46.1	37.9	22.0	---	---	---	148	148	208	22.0
100	125.4	127.0	144.0	84	57.4	26.6	28.0	108.0	63.9	44.1	46.1	37.9	22.0	---	---	---	154	154	218	22.0

HB35N-S

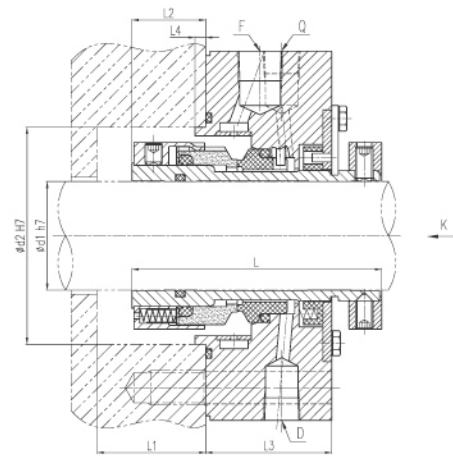

Advantages

- Easy and reliable installation
- Widely applicable for retrofitting or original equipment
- Materials can be customized based on operating conditions

Design Features

- Single end
- Multiple springs
- Balanced cartridge type
- Independent of rotation direction
- Complies with API 682 standard

Application Range

- **Media:** Suitable for petroleum, chemical industry, liquefied petroleum gas, weak acids, alkalis, salts, and media containing low solid content
- **Pressure:** ≤4 MPa
- **Temperature:** -40℃ to 220℃
- **Linear speed:** ≤20 m/s

Dimensional Data

S.D.	d1	d2	d3	d4	d5	L	L1	L2	L3	L4
20	20	70	105	129	14	96	50	28	50	5
30	30	80	115	139	14	98	55	28	52	5
40	40	90	125	149	14	98	60	28	52	5
50	50	100	140	168	18	115	55	34	58	5
60	60	120	160	188	18	123	60	40	60	5
70	70	130	170	198	18	123	65	40	60	5
80	80	140	180	208	18	128	70	45	60	5
90	90	160	205	238	22	128	65	45	60	5
100	100	170	215	248	22	128	70	41	65	5
110	110	180	225	258	22	128	75	41	65	5

HB35K-T

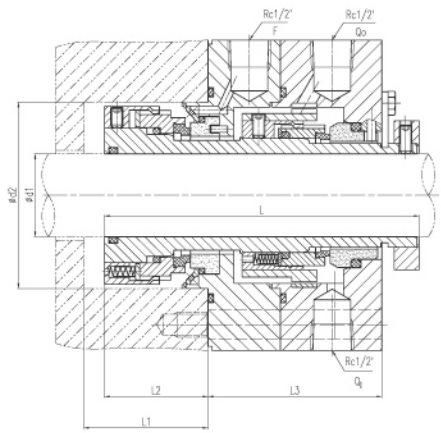

Advantages

- orque transmission via metal on the rotating ring ensures safe operation
- Widely applicable for retrofitting or original equipment

Design Features

- Double end
- Multiple springs
- Balanced cartridge type
- Independent of rotation direction

Application Range

- **Media:** Suitable for petroleum, chemical industry, liquefied petroleum gas, weak acids, alkalis, salts, and media containing low solid content
- **Pressure:** ≤4 MPa
- **Temperature:** -40℃ to 220℃
- **Linear speed:** ≤20 m/s

Dimensional Data

S.D.	d1	d2	d3	d4	d5	L	L1	L2	L3
20	20	70	105	129	14	144	50	47	79
30	30	80	115	139	14	147	55	50	79
40	40	90	125	149	14	147	60	50	79
50	50	100	140	168	18	158	55	52	88
60	60	120	160	188	18	166	60	57	90
70	70	130	170	198	18	167	65	62	90
80	80	140	180	208	18	175	70	67	90
90	90	160	205	238	22	179	65	62	98
100	100	170	215	248	22	185	70	67	98
110	110	180	225	258	22	188	75	72	98

HB35KP-D

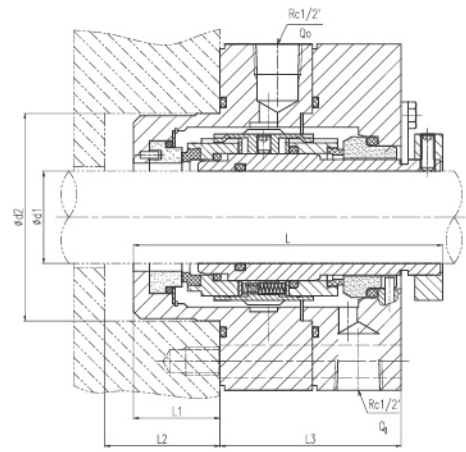

Advantages

- Universal applicability for retrofitting or original equipment
- Standardized component design
- Diverse material options
- Special materials available for metal parts

Design Features

- Double seal
- Balanced
- Rotation-independent
- API 682 compliant

Application Range

- **Media:** Flammable, explosive, toxic, and hazardous substances
- **Pressure:** 0–4 MPa
- **Temperature:** -40 °C to 220 °C
- **Linear speed:** ≤20 m/s

Dimensional Data

S.D.	d1	d2	d3	d4	d5	L	L1	L2	L3
20	20	70	105	129	14	127	30	50	79
30	30	80	115	139	14	130	33	55	79
40	40	90	125	149	14	135	38	60	79
50	50	100	140	168	18	142	38	55	85
60	60	120	160	188	18	151	47	60	85
70	70	130	170	198	18	156	52	65	85
80	80	140	180	208	18	160	56	70	85
90	90	160	205	238	22	160	46	65	95
100	100	170	215	248	22	169	55	70	95
110	110	180	225	258	22	169	55	75	95

HQ680

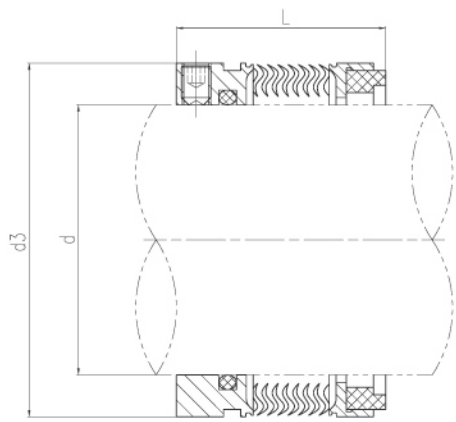

Advantages

- O-ring remains stationary relative to the shaft
- Suitable for high-viscosity conditions

Design Features

- Static secondary sealing
- Standardized components

Application Range

- **Pressure:** ≤2.5 MPa
- **Temperature:** -75℃ to 290℃
- **Linear speed:** ≤25 m/s

Dimensional Data

Seal	d	d1	d2
No.	+.000	Ref.	Ref.
Size Code	-0.05		
-12	.750	1.312	1.250
-14	.875	1.437	1.250
-15	.937	1.500	1.250
-16	1.000	1.562	1.250
-18	1.125	1.687	1.250
-20	1.250	1.812	1.312
-22	1.375	1.937	1.437
-24	1.500	2.062	1.437
-26	1.625	2.187	1.437
-28	1.750	2.312	1.437
-30	1.875	2.437	1.500
-32	2.000	2.562	1.500
-34	2.125	2.687	1.500
-36	2.250	2.812	1.562
-38	2.375	2.937	1.562
-40	2.500	3.187	1.562
-42	2.625	3.312	1.625
-44	2.750	3.437	1.625
-46	2.875	3.625	1.687

Seal	d	d1	d2
No.	+.000	Ref.	Ref.
Size Code	-0.05		
-48	3.000	3.750	1.687
-50	3.125	3.875	1.750
-52	3.250	4.000	1.750
-54	3.375	4.125	1.750
-56	3.500	4.250	1.875
-58	3.625	4.375	1.875
-60	3.750	4.500	1.875
-62	3.875	4.625	1.875
-64	4.000	4.750	1.875
-68*	4.250	5.187	1.903
-72*	4.500	5.438	1.903
-76*	4.750	5.688	1.903
-80*	5.000	5.938	1.903
-84*	5.250	6.213	1.903
-88*	5.500	6.463	1.903
-92*	5.750	6.714	1.903
-96*	6.000	6.964	1.903
-104*	6.500	7.470	1.903
-112*	7.000	7.971	1.903

HQ604/HQ606/HQ609

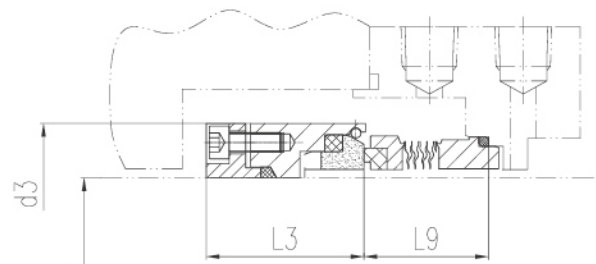

HQ604

Advantages

- Widely used in high-temperature and low-temperatureapplications
- Fork drive
- Easy installation

Design Features

- **HQ604:** High-temperature universal metal bellows, for large shaft diameters and high-speed operating conditions, as well as non-standard sealing chambers with large shaft diameters
- **HQ606:** High-temperature rotary bellows, a drive fork under the bellows for transmission, suitable for applications involving viscous or crystallization-prone media
- **HQ609:** High-temperature rotary bellows, narrow cross-section design

Application Range

- **Pressure:** ≤2.5 MPa under vacuum (≤5 MPa with double bellows)
- **Temperature:** -75°C to +425°C (with flexible graphite static packing)
- **Speed:** ≤25 m/s

Dimensional Data HQ604

Seal	d	d3	L3	L9	d	d3	L3	L9
No.	+.000	Ref.	Ref.	Ref.	+.000	Ref.	Ref.	Ref.
Size Code	-0.002							
-18	1.000	1.937	1.969	1.138	25.40	49.20	50.01	28.91
-20	1.125	2.062	1.969	1.138	28.58	52.37	50.01	28.91
-22	1.250	2.187	1.969	1.138	31.75	55.55	50.01	28.91
-24	1.375	2.312	1.938	1.138	34.93	58.72	49.23	28.91
-26	1.500	2.562	2.063	1.191	38.10	65.07	52.40	30.25
-28	1.625	2.562	2.060	1.222	41.28	65.07	52.32	31.04
-30	1.750	2.687	2.060	1.254	44.45	68.25	52.32	31.85
-32	1.875	2.812	2.062	1.254	47.63	71.42	52.37	31.85
-34	2.000	2.937	2.060	1.285	50.80	74.60	52.32	32.64
-36	2.125	3.187	2.182	1.316	53.98	80.95	55.42	33.43
-38	2.250	3.312	2.218	1.348	57.15	84.12	56.34	34.24
-40	2.375	3.437	2.186	1.379	60.33	87.30	55.52	35.03
-42	2.500	3.562	2.184	1.410	63.50	90.47	55.47	35.81
-44	2.625	3.687	2.250	1.443	66.68	93.65	57.15	36.65
-46	2.750	3.937	2.250	1.608	69.85	100.00	57.15	40.84
-48	2.875	4.062	2.281	1.608	73.03	103.17	57.94	40.84
-50	3.000	4.187	2.250	1.608	76.20	106.35	57.15	40.84
-52	3.125	4.312	2.250	1.608	79.38	109.52	57.15	40.84
-54	3.250	4.437	2.219	1.608	82.55	112.70	56.36	40.84
-56	3.375	4.562	2.282	1.608	85.73	115.87	57.96	40.84
-58	3.500	4.687	2.373	1.650	88.90	119.05	60.27	41.91
-60	3.625	4.812	2.375	1.650	92.08	122.22	60.33	41.91
-62	3.750	4.937	2.375	1.650	95.25	125.40	60.33	41.91
-64	3.875	5.062	2.375	1.650	98.43	128.57	60.33	41.91

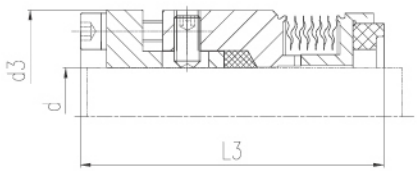

HQ606

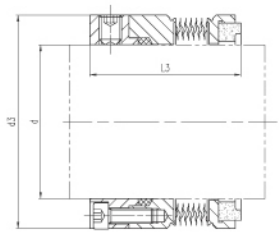

HQ609

HQ606

Seal No.	d +.000	d3 Ref.	L3 Ref.	d +.000	d3 Ref.	L3 Ref.
Size Code	-0.002			-0.05		
-16	0.750	1.625	2.312	19.05	41.28	58.72
-18	0.875	1.750	2.343	22.23	44.45	59.51
-20	1.000	1.875	2.343	25.40	47.63	59.51
-22	1.125	2.000	2.375	28.58	50.80	60.33
-24	1.250	2.125	2.375	31.75	53.98	60.33
-26	1.375	2.250	2.468	34.93	57.15	62.69
-28	1.500	2.375	2.500	38.10	60.33	63.50
-30	1.625	2.500	2.500	41.28	63.50	63.50
-32	1.750	2.625	2.531	44.45	66.68	64.29
-34	1.875	2.750	2.531	47.63	69.85	64.29
-36	2.000	2.875	2.562	50.80	73.03	65.07
-38	2.125	3.000	2.562	53.98	76.20	65.07
-40	2.250	3.250	2.750	57.15	82.55	69.85
-42	2.375	3.375	2.781	60.33	85.73	70.64
-44	2.500	3.500	2.781	63.50	88.90	70.64
-46	2.625	3.687	2.875	66.68	93.65	73.03
-48	2.750	3.812	3.000	69.85	96.82	76.20
-50	2.875	4.000	3.000	73.03	101.60	76.20
-52	3.000	4.125	3.000	76.20	104.78	76.20
-54	3.125	4.250	3.000	79.38	107.95	76.20
-56	3.250	4.375	3.000	82.55	111.13	76.20
-58	3.375	4.500	3.000	85.73	114.30	76.20
-60	3.500	4.625	3.000	88.90	117.48	76.20
-62	3.625	4.750	3.000	92.08	120.65	76.20
-64	3.750	4.875	3.000	95.25	123.83	76.20

HQ609

Seal No.	d +.000	d3 Ref.	L3 Ref.	Seal No.	d +.000	d3 Ref.	L3 Ref.
Size Code	-0.002			Size Code	-0.005		
-16	1.000	1.625	1.531	-16	25.40	41.28	38.89
-18	1.125	1.750	1.562	-18	28.58	44.45	39.67
-20	1.250	1.875	1.593	-20	31.75	47.63	40.46
-22	1.375	2.000	1.593	-22	34.93	50.80	40.46
-24	1.500	2.125	1.593	-24	38.10	53.98	40.46
-26	1.625	2.250	1.593	-26	41.28	57.15	40.46
-28	1.750	2.375	1.625	-28	44.45	60.33	41.28
-30	1.875	2.500	1.625	-30	47.63	63.50	41.28
-32	2.000	2.625	1.656	-32	50.80	66.68	42.06
-34	2.125	2.750	1.656	-34	53.98	69.85	42.06
-36	2.250	2.875	1.719	-36	57.15	73.03	43.66
-38	2.375	3.000	1.719	-38	60.33	76.20	43.66
-40	2.500	3.250	1.750	-40	63.50	82.55	44.45
-42	2.625	3.375	1.781	-42	66.68	85.73	45.24
-44	2.750	3.500	1.781	-44	69.85	88.90	45.24
-46	2.875	3.687	1.875	-46	73.03	93.65	47.63
-48	3.000	3.812	1.875	-48	76.20	96.82	47.63
-50	3.125	4.000	1.875	-50	79.38	101.60	47.63
-52	3.250	4.125	1.875	-52	82.55	104.78	47.63
-54	3.375	4.250	1.875	-54	85.73	107.95	47.63
-56	3.500	4.375	1.875	-56	88.90	111.13	47.63
-58	3.625	4.500	1.875	-58	92.08	114.30	47.63
-60	3.750	4.625	1.875	-60	95.25	117.48	47.63
-62	3.875	4.750	1.875	-62	98.43	120.65	47.63
-64	4.000	4.875	1.875	-64	101.60	123.83	47.63

HQM451KL

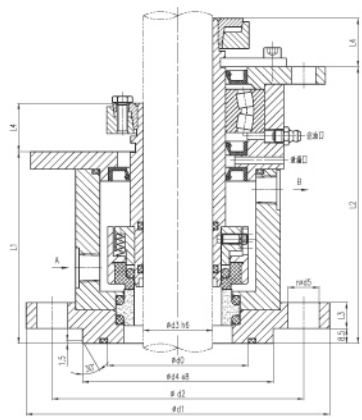

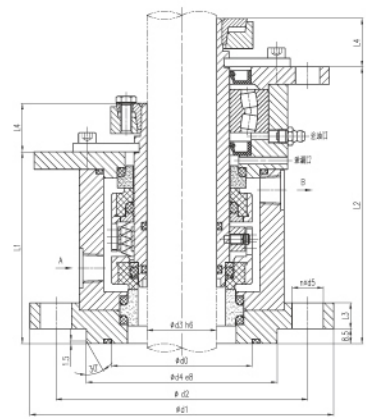

Advantages

- Standardized seals
- Can replace packing seals
- Small radial installation dimensions

Design Features

- Standardized seals
- Can replace packing seals
- Small radial installation dimensions

Application Range

- **Media:** Liquid hydrocarbons (methane, ethane, etc), liquid oxygen, liquefied natural gas
- **Pressure:** ≤1.2 MPa
- **Temperature:** -40°C to 200°C
- **Linear speed:** ≤10 m/s

Dimensional Data

S.D.	d0	d1	d2	d3	d4	n	d4	L1	L2	L3	L4	A/B
40	90	175	145	40	110	4	18	110.5	159.5	15	28	G3/8
50	135	240	210	50	176	8	18	114.5	174.5	17	28	G3/8
60	135	240	210	60	176	8	18	119	181.5	17	28	G3/8
80	155	275	240	80	204	8	22	133	217.5	20	34	G1/2
100	190	305	270	100	234	8	22	137.5	218.5	20	34	G1/2
125	215	330	295	125	260	12	22	138.5	233.5	20	40	G1/2
140	250	395	350	140	313	12	22	152.5	250.5	20	40	G1/2
160	265	395	350	160	313	12	22	141	253	25	40	G1/2
180	310	445	400	180	364	12	22	166	263.5	25	45	G1/2
200	310	445	400	200	364	12	22	171	271	25	45	G1/2

HQHSH-D

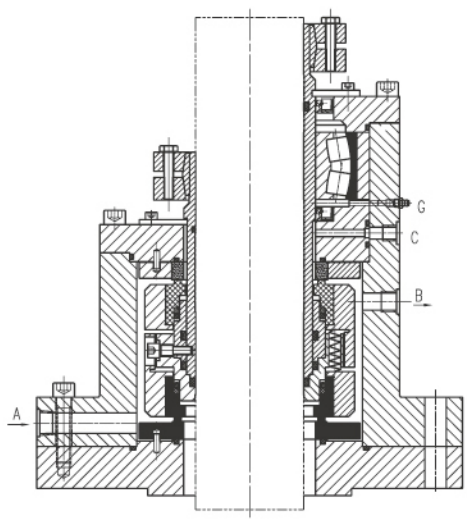

Advantages

- Complete seal assembled and tested by the manufacturer
- Flange assembly complies with DIN standards
- Option to choose with or without bearings based on actual requirements

Design Features

- Single end
- Multiple springs
- Unbalanced cartridge type

Application Range

- **Media:** Oil, water, weak acids, weak alkalis, flammable, explosive, and toxic gases
- **Pressure:** ≤1.6 MPa
- **Temperature:** -10℃ to 350℃
- **Linear speed:** ≤2 m/s

Dimensional Data

DW	d1	nxd2	d3	φk	L1	L2	L3	L4
40	200	6*18	80	170	115	170	35	45
50	230	8*18	100	200	120	180	35	55
60	255	8*18	120	225	140	210	35	60
80	295	8*23	145	260	145	230	44	60
100	315	8*23	170	280	160	245	44	65
120	345	8*23	190	310	160	250	50	65
140	380	12*23	215	345	165	265	50	65
160	440	12*27	240	395	185	300	50	75
180	475	12*27	260	430	185	310	55	75
200	465	12*27	290	420	190	290	55	75

HQ-TH

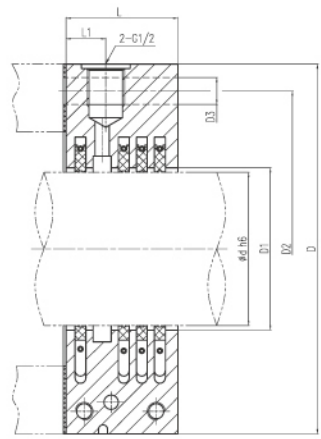

HQ-TH-A

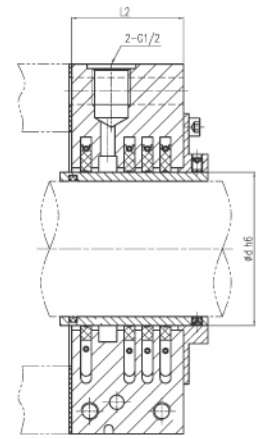

HQ-TH-B

Advantages

- Low sealing power and minimal heat generation
- Almost unaffected by shaft vibration and axial movement

Design Features

- Single flow-resistance type non-contact seal, relying on the fluid resistance effect of the sealing gap to limit medium leakage
- Primarily used for shaft sealing in industrial equipment such as fans, blowers, compressors, and centrifuges

Application Range

- **Media:** Oil, water, organic solvents, and other corrosive solutions
- **Shaft Diameter:** 40-340 mm
- **Pressure:** Vacuum to 5 bar
- **Temperature:** -20°C to 200°C

Dimensional Data

d	D1	D2	D	L	L1	L2	D3
45	49	135	165	50	20	60	15
50	54	140	170	50	20	60	15
60	64	150	180	50	20	60	15
70	74	160	190	50	20	60	15
80	84	170	200	50	20	60	15
90	94	180	210	50	20	60	15
100	104	190	220	50	20	60	15
110	114	200	230	50	20	60	15
120	124	210	240	50	20	60	15
130	134	220	250	50	20	60	15
140	144	230	260	50	20	60	15
150	154	240	270	50	20	60	15
160	164	250	280	50	20	60	15
170	174	260	290	50	20	60	15
180	184	270	300	50	20	60	15
190	194	280	310	50	20	60	15
200	204	290	320	50	20	60	15

Dry Gas Seal

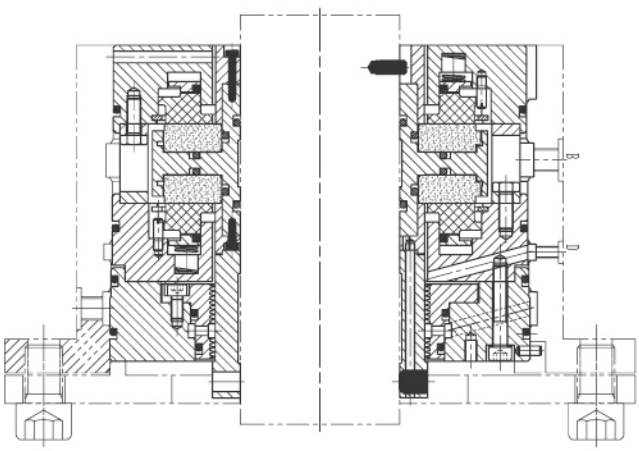

Advantages

- Suitable for operating conditions where leakage of process gas to the atmosphere is strictly prohibited, while minor internal leakage of sealing gas is acceptable, such as wet gas compressors in refineries and low-pressure chlorine compressors in chemical plants

Design Features

- Shrouded seat prevents secondary damage in the event of a seat fracture
- Seats are driven by pins, ensuring safer and more reliable operation
- Floating seats improve adaptability to varying conditions
- Barrier gas is set 0.2 MPa above the process gas pressure, minimizing leakage into the process side and ensuring complete sealing of the process gas

Application Range

- **Pressure:** ≤2MPa
- **Temperature:** -60℃～200℃
- **Speed:** ≤180m/s

Flush Plan 23

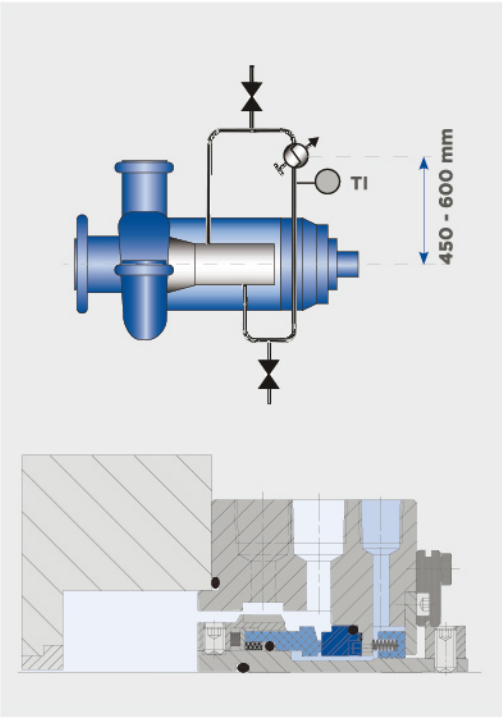

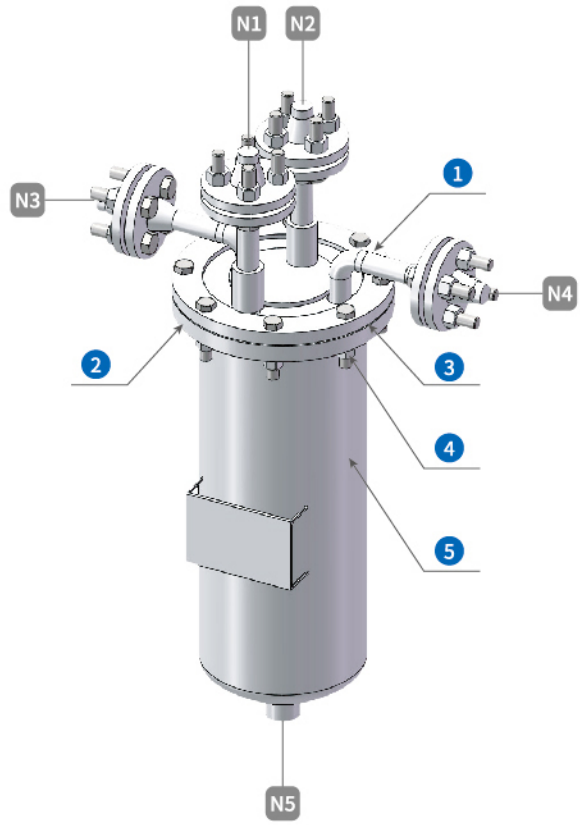

Product Application

- Complies with API Std 682-2014, 4th Edition.
- PLAN 23 can be used independently for single mechanical seals or combined with PLAN 52/53 for double mechanical seals.
- The cooler only cools the flush fluid used for sealing, and this fluid does not enter the process system, making this solution highly energy-efficient.
- Suitable for all hot water applications and is the standard flush solution for hot water and boiler feed water conditions at 80°C (180°F) and above.

1	Flange	N1	Flush Inlet
2	Flange Cover	N2	Flush Outlet
3	O-ring	N3	Cooling Water Inlet
4	Bolts	N4	Cooling Water Outlet
5	Tank Body	N5	Drain Port

Product Materials

Component	Standard Material	Alternative Materials
Housing	Carbon Steel	304 / 316L
Coil	316L	304 / 316L

Design Parameters

Design Pressure 4.0 MPa	Design Temperature 150°C
Design Standard API 682	Heat Exchange Area 0.4 / 0.6 m²

Flush Plan 52

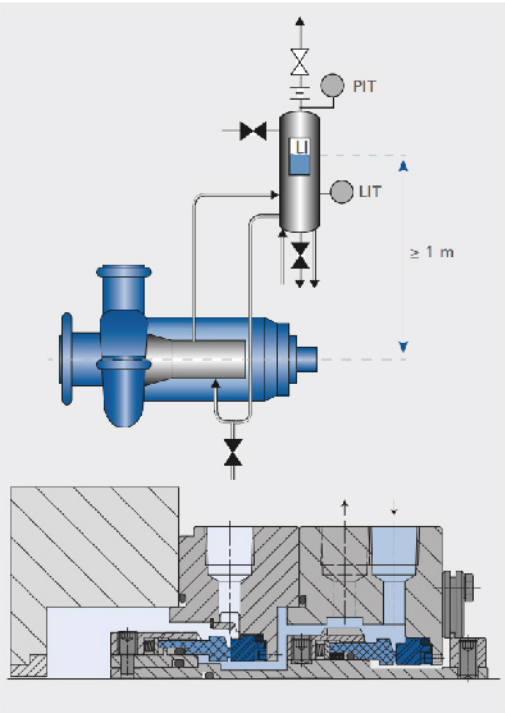

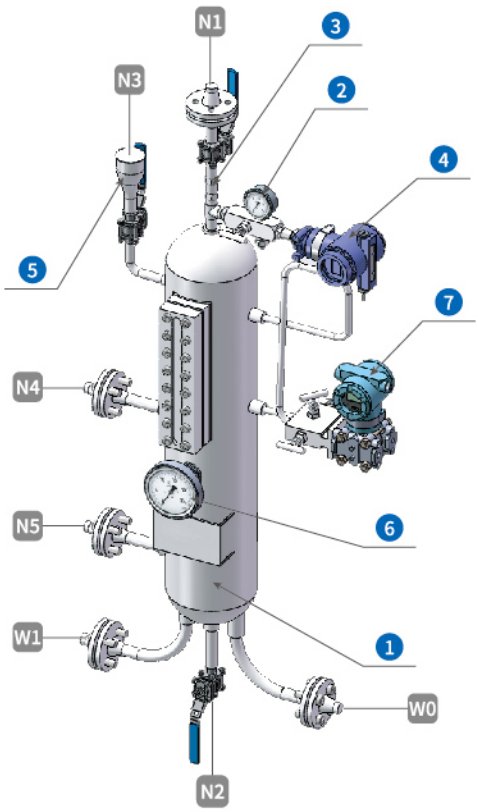

Product Application

- Complies with API 682-2014, 4th Edition
- PLAN 52 is used for double mechanical seals, providing a barrier fluid system to maintain seal performance.
- The barrier fluid is circulated through an external reservoir, ensuring consistent pressure and temperature control.
- Suitable for applications where the process fluid is hazardous or where leakage prevention is critical.

1	Flange	N1	Barrier Flush Inlet
2	Flange Cover	N2	Barrier Flush Outlet
3	O-ring	N3	Cooling Water Inlet
4	Bolts	N4	Cooling Water Outlet
5	Tank Body	N5	Drain Port

Product Materials

Component	Standard Material	Alternative Materials
Housing	Carbon Steel	304 / 316L
Reservoir	316L	304 / 316L

Design Parameters

Design Pressure 4.0 MPa	Design Temperature 150°C
Design Standard API 682	Heat Exchange Area 0.4 / 0.6 m²

Flush Plan 53A

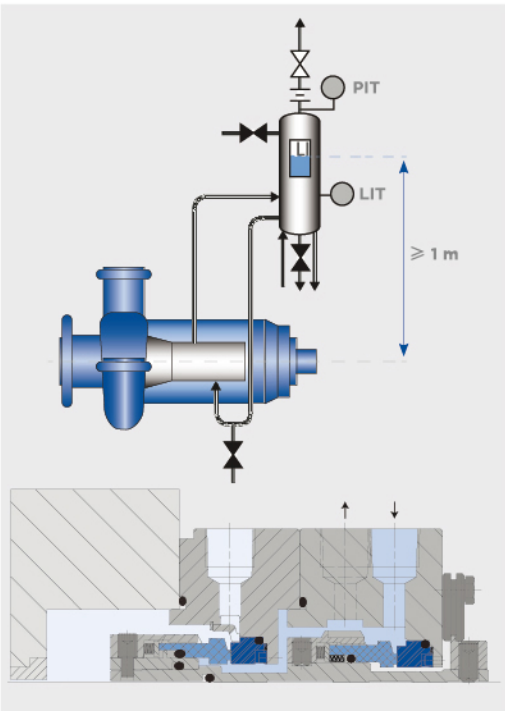

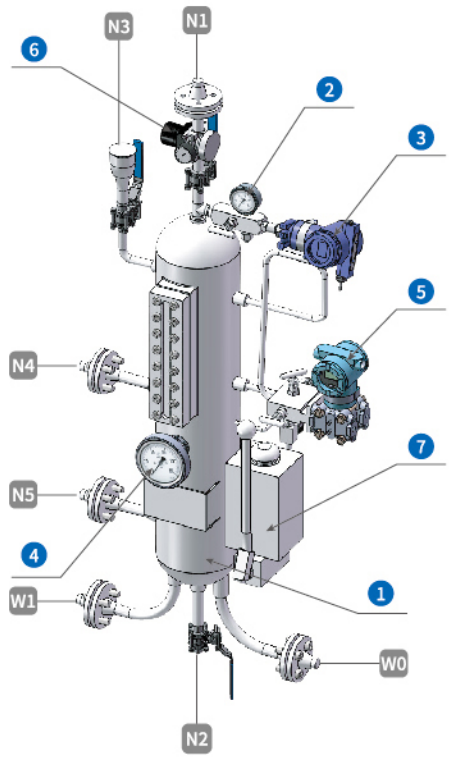

Product Application

- Complies with API Std 682-2014, 4th Edition.
- PLAN 53A is used for double mechanical seals, providing a barrier fluid system with an external reservoir.
- The barrier fluid is circulated by an external pump, ensuring effective cooling and lubrication of the seals.
- Suitable for high-pressure and high-temperature applications, especially in harsh environments.

1	Flange	N1	Barrier Fluid Inlet
2	Flange Cover	N2	Barrier Flush Outlet
3	O-ring	N3	Cooling Water Inlet
4	Bolts	N4	Cooling Water Outlet
5	Tank Body	N5	Drain Port

Product Materials

Component	Standard Material	Alternative Materials
Housing	Carbon Steel	304 / 316L
Coil	316L	304 / 316L

Design Parameters

Design Pressure 4.0 MPa	Design Temperature 150°C
Design Standard API 682	Heat Exchange Area 0.4 / 0.6 m²

Flush Plan 53B

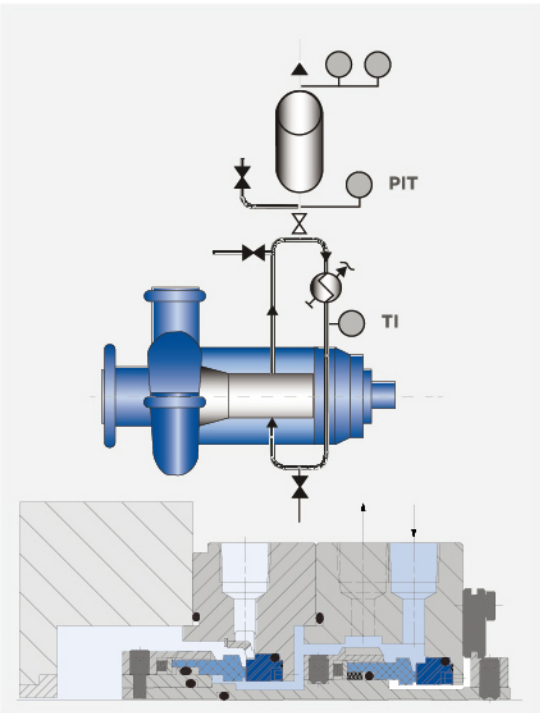

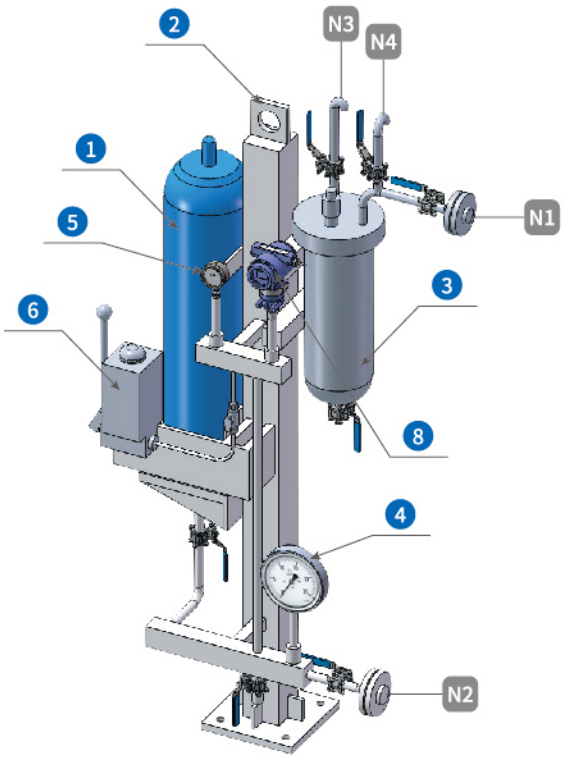

Product Application

- Complies with API Std 682-2014, 4th Edition.
- PLAN 53B is used for Arrangement 3 dual mechanical seals, where the barrier fluid pressure is higher than the maximum pressure in the seal chamber.The barrier fluid pressure is maintained by a bladder accumulator.
- This barrier fluid system is a gas-free system. It uses a bladder accumulator to prevent contact between pressurized gas and the barrier fluid, avoiding gas absorption into the fluid and enabling the seal to operate under high-pressure conditions.

1. Accumulator
2. System Bracket
3. Heat Exchanger
4. Bimetallic Thermometer
5. Full Stainless Steel Pressure Gauge
6. Manual Liquid Replenishment Pump
7. Pressure Transmitter

N1 Barrier fluid inlet (from mechanical seal)
N2 Barrier fluid outlet (from mechanical seal)
N3 Cooling water outlet
N4 Cooling water inlet

Product Materials

	Accumulator Tank	Bladder	Heat Exchanger Shell	Coil
Standard Material	Carbon Steel	NBR (Nitrile)	Carbon Steel	316L
Alternative Materials	304/316L	NBR / FKM	304/316L	304 316L

Design Parameters

Design Pressure 4.0 MPa	Design Temperature 200°C
Accumulator 20 / 35 L	Heat Exchange Area 0.4 / 0.6 m^2

Shell-and-Tube Heat Exchanger HRL-3110

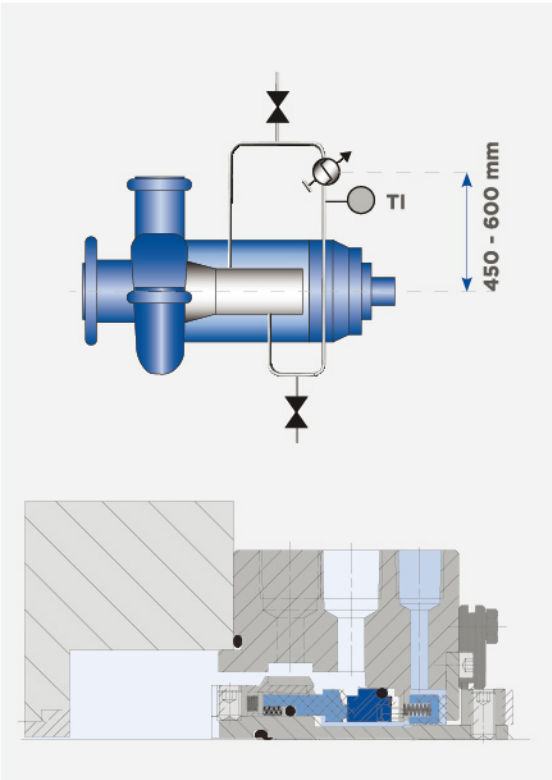

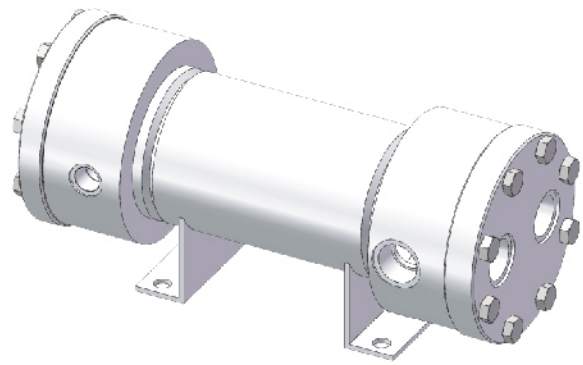

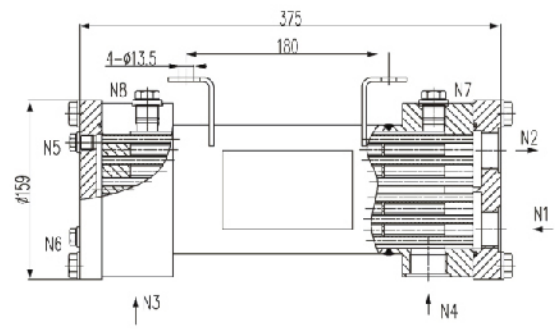

Product Application

- The HRL-3110 heat exchanger is designed for cooling circulatingfluid in sealed systems. As a shell-and-tube heat exchanger, the HRL-3110 features high cooling capacity and a compact structure.

N1	Cooling Water Inlet	N5	Cooling Water Vent Port
N2	Cooling Water Outlet	N6	Cooling Water Drain Port
N3	Seal Fluid Inlet	N7	Seal Fluid Vent Port
N4	Seal Fluid Outlet	N8	Seal Fluid Drain Port

Product Materials

Component	Standard	Alternative
Shell	304	316L
Tubes	304	304 / 316L

Design Parameters

Shell Design Pressure	Shell Design Capacity	Tube Design Pressure	Tube Design Capacity	Design Temperature
110 bar	18L	25 bar	0.7L	150°C

Heat Transfer Area
0.5 m^2

Supply System HRL-3110

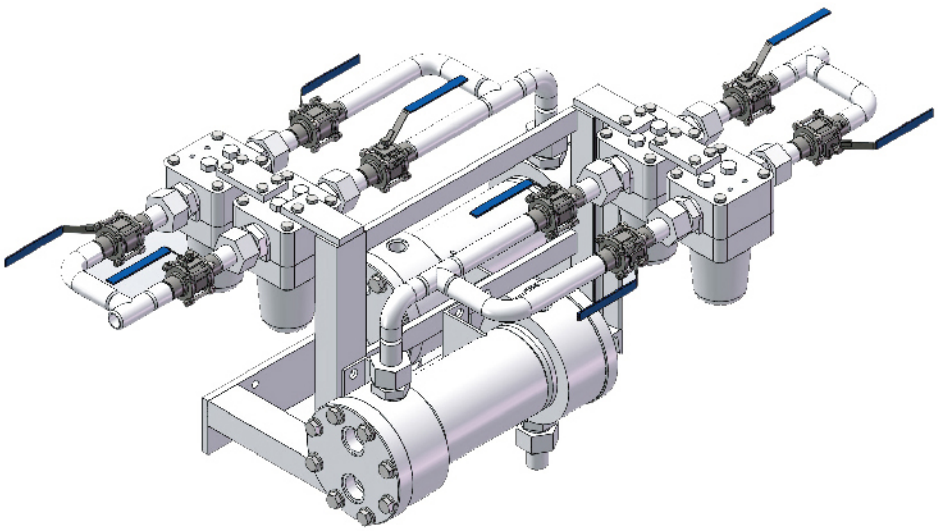

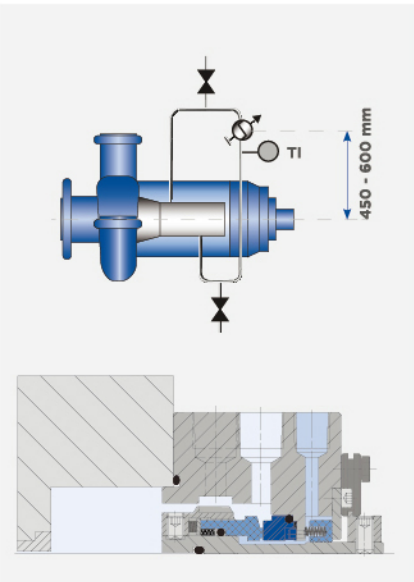

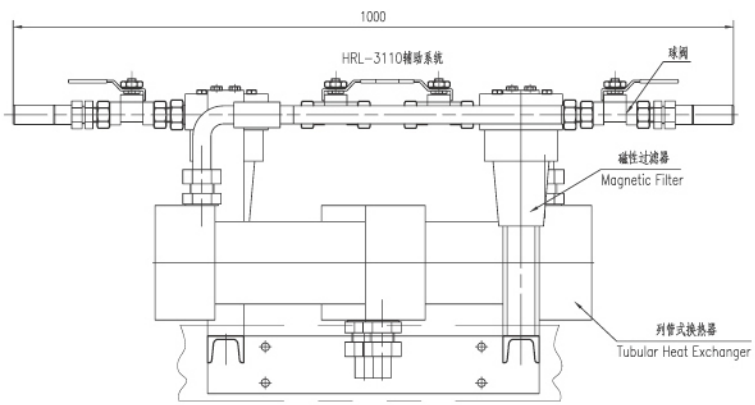

Product Application

- The Supply System HRL-3110 consists of a heat exchanger, magnetic filter, valves, piping, and other components (customizable per user requirements).
  It is designed for cooling buffer fluids, internal circulationliquids, and other media, delivering exceptional heat transfer performance.

Product Materials

Component	Standard	Alternative
Shell	304	316L
Tubes	304	304 / 316L

Hydrocyclone Separator

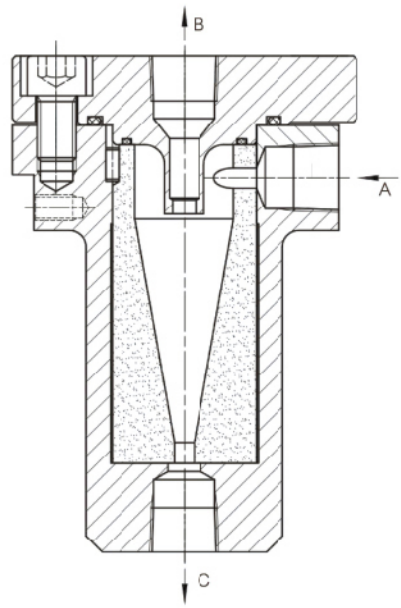

Operation & Installation

- The CCY Series Hydrocyclone Separator must be installed vertically. The pressure at outlets (C) and (B) must be lower than the inlet pressure (A). Clean liquid is discharged through the top outlet (B), while separated impurities exit through (C) and return to the pump inlet.

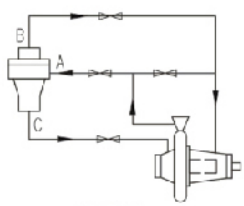

操作和安装图

- A From Pump Outlet (Rc1/2)
- B To Seal Chamber (Rc1/2)
- C To Pump Inlet (Rc1/2)

Product Application

- Hydrocyclone separators are primarily used to remove impurities and solid particles from suspensions (e.g., wastewater, slurry, crude oil contaminants in circulation). For optimal filtration efficiency, the solid particle density should be significantly higher than the fluid (API 682, 4th Edition recommends at least 2:1 ratio). The minimum required pressure differential for operation is 0.17 MPa.For dual-bearing pumps, each mechanical seal should be equipped with a dedicated hydrocyclone separator.

Product Materials

Component	Standard	Alternative
Shell	316L	304
Liner	SiC	SiC

Design Parameters

Allowable Pressure	Allowable Temperature
6.4 MPa	125°C

Bearing Isolator

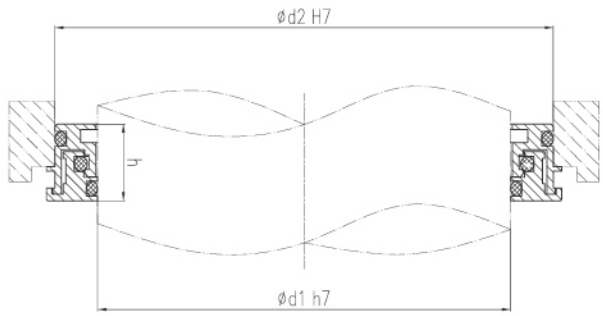

Advantages

- Can replace oil seals
- Long service life

Design Features

- Non-contact design
- No wear on the main shaft of the equipment
- Minimal additional torque, significantly reducing energy consumption
- No separate lubrication required
- Easy installation, maintenance-free

Application Range

- **Pressure:** 0 bar
- **Temperature:** -37℃ to 200℃
- **Linear Speed:** ≤45 m/s

Dimensional Data

d1	d2	d3
29	51	18
35	55	18
40	60	18
40	65	18
40	70	18
45	65	18
45	73	18
50	70	18
50	75	18
50	80	18
52	78	18
55	75	18
57	80	18
58	78	18
60	70	18
60	75	18
60	80	18
65	85	18
65	91	18
70	90	18

d1	d2	d3
70	95	18
70	96	18
70	100	18
75	95	18
80	100	18
80	105	18
80	110	18
85	105	18
90	100	18
90	110	18
90	120	18
92	112	18
92	113	18
95	115	18
95	115	28
97	117	18
100	120	18
100	120	28
100	125	18
100	130	18

d1	d2	d3
105	125	18
107	137	25
110	130	18
110	135	18
110	140	18
114.3	152.5	17.7
115	135	18
115	145	25
125	155	25
140	170	25
140	175	25
140	180	25
160	180	18
160	185	18
160	190	18
165	195	18
175	205	25
190	210	25
190	215	25
190	220	25

Guide Bearing

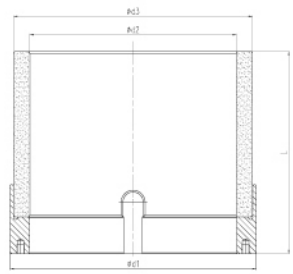

Bearing Sleeve

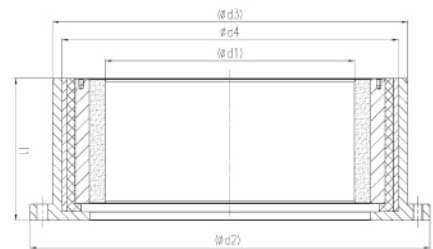

Guide Bearing

Advantages

- Exceptional wear & corrosion resistance
- Stable performance with extended service life

Design Features

- Self-lubricating properties
- High reliability – Components resist thermal shock (low/high temperature cycling)
- SiC guide bearings are radial bearings made of high-performance ceramic materials, primarily used in rotating machinery such as pumps

Dimensional Data

Bearing Sleeve

INDEX	d1	d2	d3	L
01	106	75	100	120
02	116	85	110	125
03	126	95	120	130
04	136	105	130	135
05	151	115	145	155
06	161	125	155	160
07	171	135	165	165
08	181	145	175	170
09	201	165	198	180
10	223	185	215	200
11	243	205	235	210
12	268	225	260	220
13	288	245	280	250
14	313	265	305	260
15	333	285	325	270

Guide Bearing

INDEX	NENN- ø	d1	d2	d3	d_4 H6/r6	l3	GEWICHT (KG)
01	75	100	225	180	165	69	8.3
02	85	110	235	190	175	74	9.4
03	95	120	245	200	185	79	10.5
04	105	130	255	210	195	84	12
05	115	145	280	235	220	94	16
06	125	155	305	250	230	99	20
07	135	165	315	260	240	107	23
08	145	175	330	275	255	112	26
09	165	195	350	295	275	122	30
10	185	215	370	315	295	132	35
11	205	235	390	335	315	142	40
12	225	260	425	370	350	152	50
13	245	280	450	395	370	164	62
14	265	305	490	435	412	174	78
15	285	325	510	455	432	184	86

Oil Lubrication Stern Shaft Sealing Device

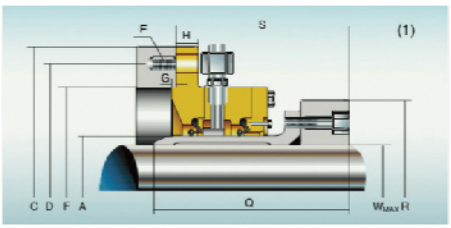

YQ2

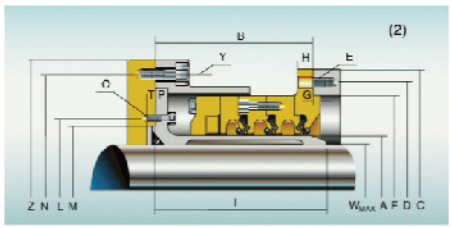

YH3DW

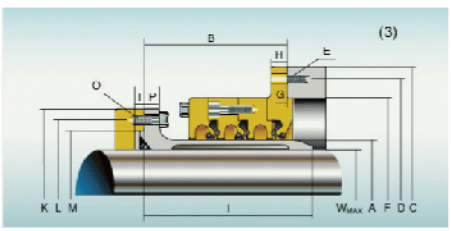

YH3

Size table of YQ2、YH3DW Other sizes

Size	70	90	110	125	155	170	190	200	220	240	260	280	300	330	355	380	400	420	450	480	500	530	560	600	630	670	710	750	800	850	900	950	1000	1060	1120	1180	1250
A	70	90	110	125	155	170	190	200	220	240	260	280	300	330	355	380	400	420	450	480	500	530	560	600	630	670	710	750	800	850	900	950	1000	1060	1120	1180	1120
WMAX	50	75	95	110	140	155	175	185	205	220	240	260	280	310	330	355	375	395	425	455	475	500	530	560	590	630	670	710	750	795	840	890	940	990	1040	1090	1040
B	160	160	160	160	160	160	160	160	160	170	175	175	175	175	195	195	200	200	225	225	225	225	240	240	245	245	280	280	310	310	330	330	330	350	355	355	355
C	205	225	245	275	305	320	340	350	370	425	445	465	485	515	565	590	610	630	675	705	725	755	820	860	890	930	990	1030	1090	1140	1200	1250	1300	1400	1460	1520	1460
D	180	200	220	245	275	290	310	320	340	390	410	430	450	480	525	550	570	590	630	660	680	710	765	805	835	875	930	970	1030	1080	1135	1185	1235	1325	1385	1445	1385
E	8 M10	8 M10	8 M10	8 M12	8 M12	8 M12	8 M12	8 M12	8 M12	12 M16	12 M16	12 M16	12 M16	12 M16	12 M20	12 M20	12 M20	12 M20	12 M20	12 M20	12 M20	12 M20	12 M24	12 M24	12 M24	12 M24	16 M24	16 M24	20 M24	20 M24	20 M24	20 M24	20 M24	24 M30	24 M30	24 M30	24 M30
F	155	175	195	210	240	255	275	285	305	345	365	385	405	435	475	500	520	540	575	605	625	655	700	740	770	810	865	905	960	1010	1065	1115	1165	1245	1305	1365	1440
G	5	5	5	5	6	6	6	6	6	7	7	7	7	7	7	7	7	7	8	8	8	8	9	9	9	9	10	10	10	10	11	11	11	11	11	11	11
H	15	15	15	15	20	20	20	20	20	20	20	20	20	20	30	30	30	30	30	30	30	30	35	35	35	35	40	40	40	40	45	45	45	50	50	50	50
I	180	180	180	180	180	180	180	180	180	190	195	195	195	195	215	215	220	220	245	245	245	245	260	260	265	265	300	300	330	330	350	350	350	370	375	375	390
K	120	140	165	184	214	240	270	280	270	320	340	360	375	425	450	480	500	520	550	590	600	630	675	700	760	800	840	885	945	1000	1070	1130	1170	1230	1300	1300	1430
L	100	120	145	164	194	220	240	250	270	290	310	330	346	390	416	440	460	486	510	550	560	590	630	660	710	750	790	836	890	950	1010	1070	1110	1170	1230	1290	1360
M	80	100	125	145	175	200	214	224	240	260	284	300	320	360	384	406	424	450	476	510	526	550	588	620	670	710	740	780	825	870	920	970	1040	1100	1160	1220	1290
T	12	12	12	12	12	12	12	12	12	12	12	12	12	12	18	18	18	18	18	18	18	18	20	20	20	20	20	20	20	20	20	20	20	20	20	20	20
O	8 M8	8 M8	8 M8	8 M8	8 M8	8 M8	8 M8	8 M12	8 M12	8 M12	8 M12	8 M12	12 M12	12 M12	12 M16	12 M16	12 M16	12 M16	12 M16	12 M20	12 M20	12 M20	12 M20	12 M20	12 M24	12 M24	12 M24	16 M24	16 M24	12 M24	16 M24	16 M24	20 M24	20 M24	16 M30	24 M30	24 M30
P	12	12	12	12	12	12	12	12	12	12	12	12	15	15	15	15	20	20	20	20	20	20	20	20	25	25	25	25	30	30	35	35	35	35	40	40	40
Q	145	145	145	145	160	160	160	160	160	175	175	175	175	175	195	195	195	195	220	220	220	220	240	240	255	255	285	285	285	285	305	305	305	325	325	325	325
R	140	140	175	190	210	230	250	260	280	310	330	350	370	400	430	460	480	500	530	560	580	610	650	690	730	785	830	870	915	960	1010	1060	1130	1200	1250	1300	1380
S	130	130	130	130	145	145	145	145	145	160	160	160	160	160	184	184	184	184	206	206	206	206	224	224	241	241	270	270	270	270	290	290	290	310	310	310	310

Size table of YH3F and YH3DW Other sizes are the same as above mentioned

B	180	180	180	180	180	180	180	180	180	190	195	195	195	195	195	215	215	220	220	245	245	245	260	260	265	265
I	200	200	200	200	200	200	200	200	200	210	215	215	215	215	215	235	235	240	240	265	265	265	280	280	285	285
N	205	225	245	260	305	320	340	345	365	410	427	450	450	485	505	540	580	595	620	650	682	700	780	830	860	895
Y	8 M10	8 M10	8 M10	8 M10	8 M10	8 M10	10 M10	10 M10	10 M10	10 M12	10 M12	12 M12	12 M16	12 M16	16 M16	16 M16	16 M16	16 M16	16 M16	16 M16	16 M16	16 M16	16 M20	16 M20	16 M20	16 M20
Z	250	270	290	305	350	365	385	390	410	460	475	505	545	565	595	635	650	675	705	740	755	785	845	895	925	960

江苏华青流体科技有限公司
Jiangsu Huaqing Fluid Technology Co.,Ltd

No. 32 Huada Road, Zhangjiagang Free Trade Zone
Jiangsu Province, China

0086-18962276627

www.hq-seal.com

seals@hq-seal.com