LED & LCD SCREEN

Poster Advertising LED Screen

Guangzhou JunChen Display Technology Co.,Ltd.

Address:303A,No.6-2 ,Yagang Middle Road, ShiMen Street, Baiyun District Guangzhou City, Guangdong Province,China.

Contact: Junchen Tel/whatsapp/Mob:+86 18818901997 Webiste:www.jcdisplay.com

Certificate – Сертификат – 證明書 – Certificat – 증명서 – شهادة

Shenzhen ZKT Technology Co., Ltd.
1/F, No. 101, Building B, No. 6, Tangwei Community Industrial Avenue, Fuhai Street, Bao'an District, Shenzhen, China

Certificate of Compliance

Certificate Number: ZKT-25063014978C

Certificate's Holder : Guangzhou JunChen Display Technology Co.,Ltd 209-213, No. 59 Yagang Middle Road, Baiyun District, Guangzhou City

Manufacturer : Guangzhou JunChen Display Technology Co.,Ltd 209-213, No. 59 Yagang Middle Road, Baiyun District, Guangzhou City

Trade Mark : N/A

Product : LED COB DISPLAY

Model(s) : p1.25
P0.6, P0.7, P0.9, P1.25, P1.53, P1.56, P1.86, P1.876, P1.95, P2, P2.5, P2.604, P2.976, P3, P3.076, P3.75, P3.91, P3.91-7.82, P2.6-5.8, P4, P4.81, P4.75, P5, P5.33, P5.9, P6, P6.67, P8, P10, P10.4, P12.5, P15.625, P16, P20, P25, P31.25, P50

Test Standard : EN 55032:2015/A11:2020/A1:2020, EN 55035:2017/A11:2020, EN IEC 61000-3-2:2019/A1:2021/A2:2024, EN 61000-3-3:2013/A1:2019/A2:2021, EN 61000-4-2:2009, EN IEC 61000-4-3:2020, EN 61000-4-4:2012, EN 61000-4-5:2014/A1:2017, EN IEC 61000-4-6:2023, EN 61000-4-8:2010, EN IEC 61000-4-11:2020

This Attestation of Compliance is issued on a voluntary basis for electrical equipment below the voltage limits of EMC Directive 2014/30/EU. The essential requirement are fulfilled accordingly based on the technical specifications applicable at the time of issuance. See also notes overleaf. It is only valid in connection with the test report number: ZKT-25063014978E.

CE

Shenzhen ZKT Technology Co., Ltd. Approved Manager Jul. 07, 2025

This Certificate of Conformity is based on single evaluation of the submitted sample(s) of the above mentioned product. It does not imply an assessment of the whole product and relevant . Directives to be observed.

☎ +86-400 000 9970 ☎ +86-755-22336688 ✉ zkt@zkt-lab.com www.zkt-lab.com

Certificate – Сертификат – 證明書 – Certificat – 증명서 – شهادة

Shenzhen ZKT Technology Co., Ltd.
1/F, No. 101, Building B, No. 6, Tangwei Community Industrial Avenue, Fuhai Street, Bao'an District, Shenzhen, China

Certificate of Compliance

Certificate Number:ZKT-25063014977C

Certificate's Holder : Guangzhou JunChen Display Technology Co.,Ltd 209-213, No. 59 Yagang Middle Road, Baiyun District, Guangzhou City

Manufacturer : Guangzhou JunChen Display Technology Co.,Ltd 209-213, No. 59 Yagang Middle Road, Baiyun District, Guangzhou City

Trade Mark : N/A

Product : LED COB DISPLAY

Model(s) : P1.25
P0.6 P0.7 P0.9 P1.25 P1.53 P1.56 P1.86 P1.876 P1.95 P2 P2.5 P2.604 P2.976 P3 P3.076 P3.75 P3.91 P3.91-7.82 P2.6-5.8 P4 P4.81 P4.75 P5 P5.33 P5.9 P6 P6.67 P8 P10 P10.4 P12.5 P15.625 P16 P20 P25 P31.25 P50

Test Standard : EN IEC 62368-1:2024+A11:2024

This Attestation of Compliance is issued on a voluntary basis for electrical equipment below the voltage limits of Low Voltage Directive 2014/35/EU. The essential requirement are fulfilled accordingly based on the technical specifications applicable at the time of issuance. See also notes overleaf. It is only valid in connection with the test report number: ZKT-25063014977S.

CE

Shenzhen ZKT Technology Co., Ltd. Approved Manager Jul. 04, 2025

This Certificate of Conformity is based on single evaluation of the submitted sample(s) of the above mentioned product. It does not imply an assessment of the whole product and relevant . Directives to be observed.

☎ +86-400 000 9970 ☎ +86-755-22336688 ✉ zkt@zkt-lab.com www.zkt-lab.com

Certificate – Сертификат – 證明書 – Certificat – 증명서 – شهادة

Shenzhen ZKT Technology Co., Ltd.
1/F, No. 101, Building B, No. 6, Tangwei Community Industrial Avenue, Fuhai Street, Bao'an District, Shenzhen, China

SUPPLIER'S DECLARATION OF CONFORMITY

Certificate Number: ZKT-25063014979C

Certificate's Holder : Guangzhou JunChen Display Technology Co.,Ltd 209-213, No. 59 Yagang Middle Road, Baiyun District, Guangzhou City

Manufacturer : Guangzhou JunChen Display Technology Co.,Ltd 209-213, No. 59 Yagang Middle Road, Baiyun District, Guangzhou City

Trade Mark : N/A

Product : LED COB DISPLAY

Model(s) : p1.25
P0.6, P0.7, P0.9, P1.25, P1.53, P1.56, P1.86, P1.876, P1.95, P2, P2.5, P2.604, P2.976, P3, P3.076, P3.75, P3.91, P3.91-7.82, P2.6-5.8, P4, P4.81, P4.75, P5, P5.33, P5.9, P6, P6.67, P8, P10, P10.4, P12.5, P15.625, P16, P20, P25, P31.25, P50

Test Standard : FCC Part 15 B, ANSI C63.4:2014

This Attestation of Compliance is issued on a voluntary basis for electrical equipment below the voltage limits of FCC standard. The essential requirement are fulfilled accordingly based on the technical specifications applicable at the time of issuance. See also notes overleaf. It is only valid in connection with the test report number: ZKT-25063014979E.

FC

Shenzhen ZKT Technology Co., Ltd. Approved Manager Jul. 07, 2025

This Certificate of Conformity is based on single evaluation of the submitted sample(s) of the above mentioned product. It does not imply an assessment of the whole product and relevant . Directives to be observed.

☎ +86-400 000 9970 ☎ +86-755-22336688 ✉ zkt@zkt-lab.com www.zkt-lab.com

Certificate – Сертификат – 證明書 – Certificat – 증명서 – شهادة

Shenzhen ZKT Technology Co., Ltd.
1/F, No. 101, Building B, No. 6, Tangwei Community Industrial Avenue, Fuhai Street, Bao'an District, Shenzhen, China

Certificate of Compliance

Certificate Number: ZKT-25063014980C

Certificate's Holder : Guangzhou JunChen Display Technology Co.,Ltd 209-213,No. 59 Yagang Middle Road,Baiyun District, Guangzhou City

Manufacturer : Guangzhou JunChen Display Technology Co.,Ltd 209-213,No. 59 Yagang Middle Road,Baiyun District, Guangzhou City

Trade Mark : N/A

Product : LED COB DISPLAY

Model(s) : p1.25
P0.6 P0.7 P0.9 P1.25 P1.53 P1.56 P1.86 P1.876 P1.95 P2 P2.5 P2.604 P2.976 P3 P3.076 P3.75 P3.91 P3.91-7.82 P2.6-5.8 P4 P4.81 P4.75 P5 P5.33 P5.9 P6 P6.67 P8 P10 P10.4 P12.5 P15.625 P16 P20 P25 P31.25 P50

Test Method : IEC 62321-3-1:2013, IEC 62321-4:2013+A1:2017, IEC 62321-5:2013, IEC 62321-6:2015, IEC 62321-7-1:2015, IEC 62321-7-2:2017, IEC 62321-8:2017

The following products have been tested by us and found in conformity with the (RoHS) Directive 2011/65/EU Annex II amending Annex (EU)2015/863 and amending Annex (EU)2017/2102. It is possible to use CE Marking to demonstrate the conformity with this Directive.It is only valid in connection with the test report number: ZKT-25063014980R.

RoHS

Shenzhen ZKT Technology Co., Ltd. Approved Manager Jul. 01, 2025

This Certificate of Conformity is based on single evaluation of the submitted sample(s) of the above mentioned product. It does not imply an assessment of the whole product and relevant . Directives to be observed.

☎ +86-400 000 9970 ☎ +86-755-22336688 ✉ zkt@zkt-lab.com www.zkt-lab.com

Product Introduction

Our LED display screen is made from die-cast aluminium and is lightweight, slimline and easy to move. It is ideal for use in a variety of settings.

The product is 640 x 1920mm and works with 1.8mm, 2mm and 2.5mm pixels.The display has wheels at the bottom for easy movement. It can be used on its own or connected to form a larger screen.

This versatile solution is suitable for use in many settings, including shopping malls, retail stores, restaurants, hotel lobbies, airports, and railway stations.

Product Parameters

Pixel pitch	1.86mm	2mm	2.5mm	3mm	4mm
Module Size	320mm*160mm			192mm*192mm	320mm*160mm
Scan Mode	1/43scan	1/40scan	1/32scan	1/32scan	1/20scan
Package Mode	SMD1515	SMD1515	SMD2121	SMD2121	SMD2121
Pixel Resolution	172dots(W)*86dots(H)	160dots(W)*80dots(H)	128dots(W)*64dots(H)	64dots(W)*64dots(H)	80dots(W)*40dots(H)
Drive Type	Constant drive (IC:MBI5124/ICN2153)				
Color Configuration	SMD 3 in 1 1R1G1B				
Control System	Nova star				
Input Voltage	AC220V/50Hz or AC110V/60Hz				
Average Power Consumption	330W/m²				
Poster Screen Size	640mm(L)*1920mm(H)*45mm(D)			576mm*1920mm*45mm	640mm*1920mm*45mm
Pixel Denisty	289444dots/m²	250000dots/m²	160000dots/m²	111111dots/m²	62500dots/m²
Material	Acrylic +Aluminum				
LED	Kinglight/ Nationstar				
Refresh Rate	2880/3840hz				
Colors	549 Billion				
Brightness	≥800cd/m²				
Life Span	≥100,000 hours				
IP Rating(Front/Rear)	IP43				
Min. Viewing Distance	≥1.86m	≥2m	≥2.5m	≥3m	≥4m
View Angle	160°(W) 120°(H)				
Temperature-operating	-30℃ ~ +60℃				
Humidity-operating	10%-95%				
Source compatibility	AV,DVI,HDMI,SDI,S-Video,DP etc				
Thickness	85mm				

Product Details

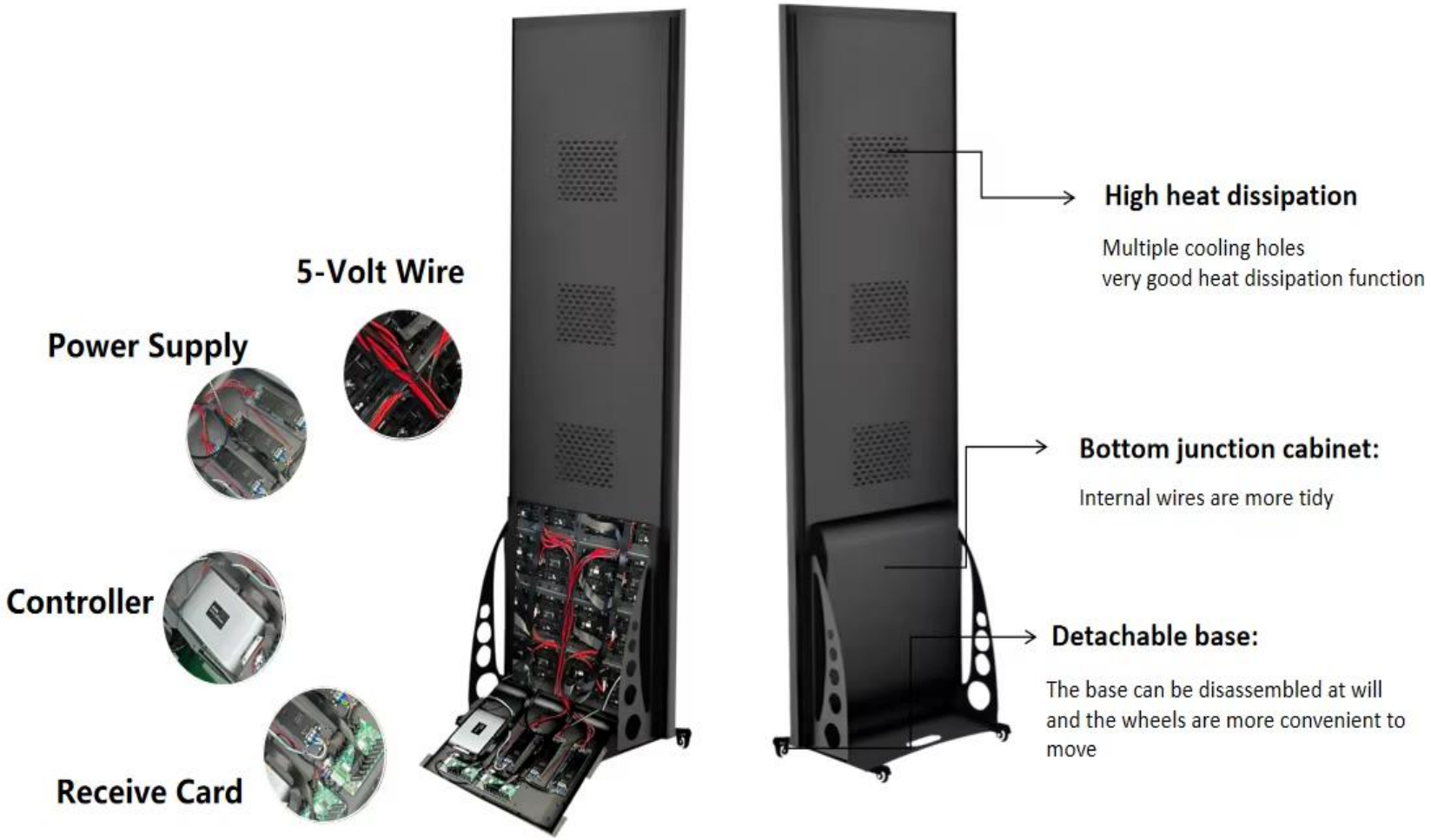

Product Features

1. Ultra thin, preciously simple: Extremely simple design, light weight to realise truly ultra-thin and portable.

Front view Side view Back view

2. Smart split screen and various uses: Different split screen display areas can be set to display video, HD pictures, text, even weather forecast and corporate LOGO ect.

Full screen Dual screen

Three screens Four screens

Product Features

3. Multiple Installation available: 1. Base-standing 2. Bracket-standing 3. Hanging 4. Wall-mounting 5.Free creative

Base-standing

Bracket-standing

Hanging

Wall-mounting

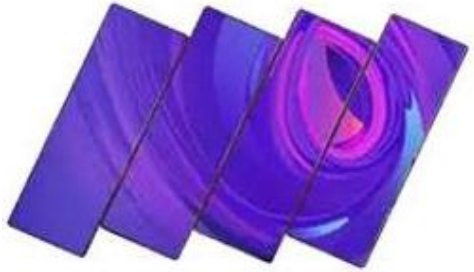

Free creative

Creative installation modes

Hot Item

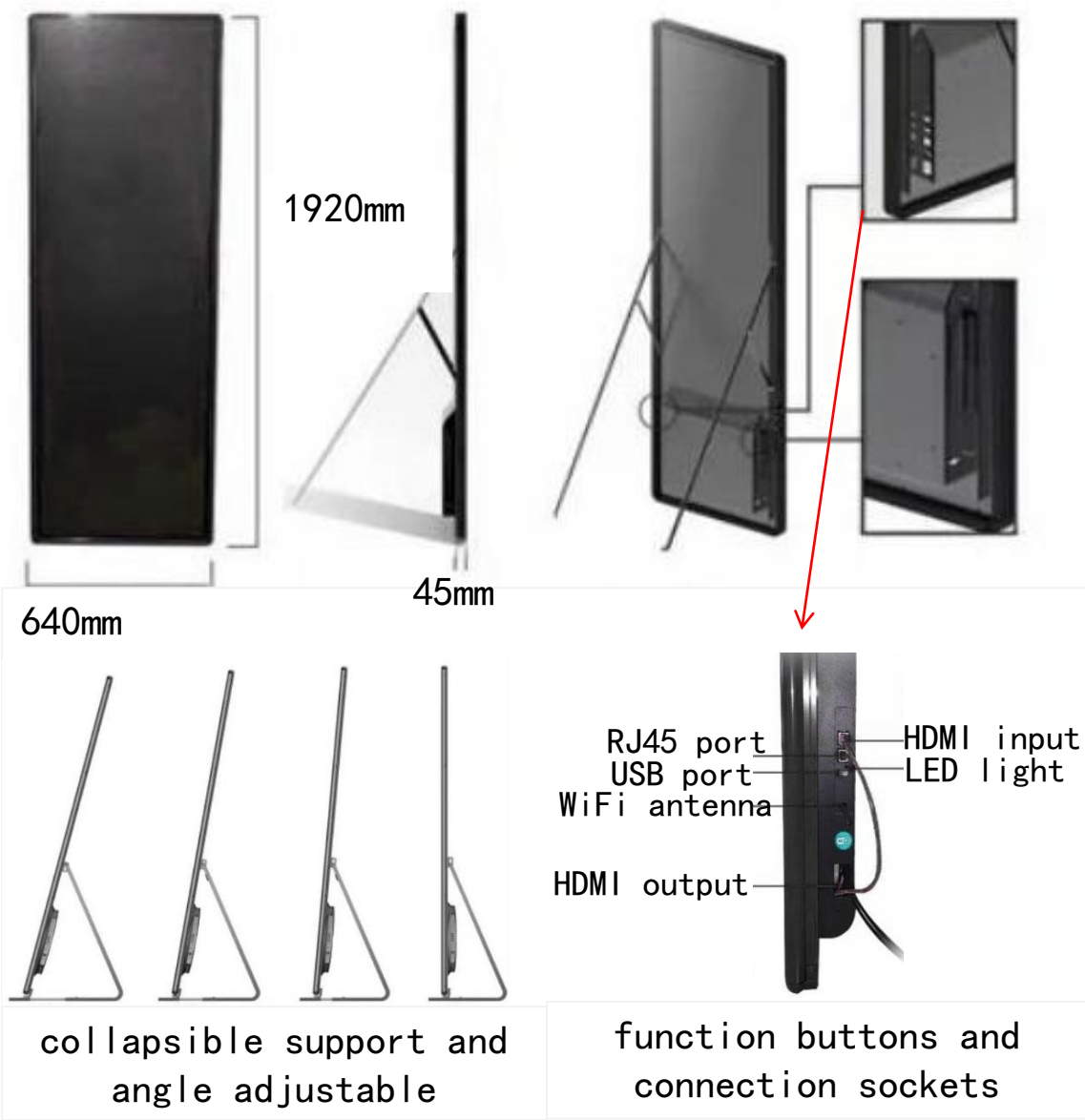

Bracket-standing Poster LED Screen Features:

1.Size: 640mm(L)x1920mm(W)x45mm(H).

2.Angle adjustable: The collapsible bracket allows the angle to be adjusted from 75 to 90 degrees.

3.Simple operation:Each poster screen has its own asynchronous processor TB1, and can be controlled by 3G/4G/WiFi/USB Disk/LAN ect.

4.Heat dissipation: 3 pieces heat dissipation holes make poster led screen cool without fans.

5.Signal & Power plug: It makes faster and easier connection.

Application

Shopping mall

Home design

Self-help guide

Outfit shop

Exhibition display

Welcome display

Project Case

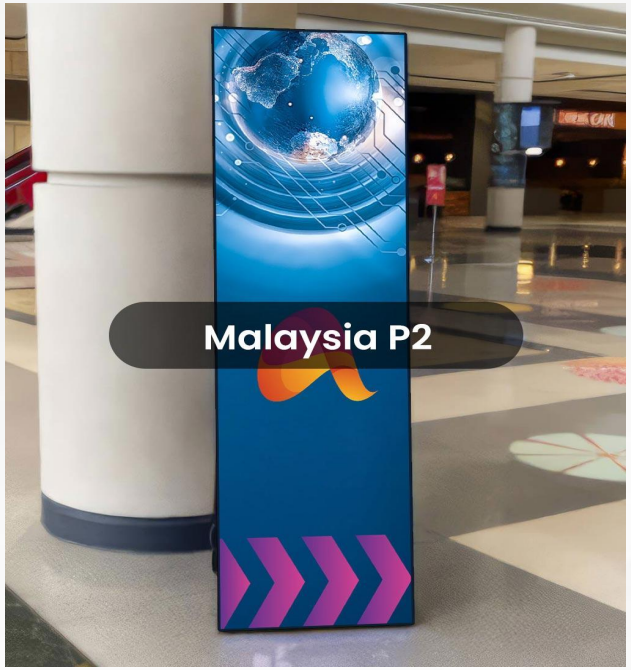

Control Method

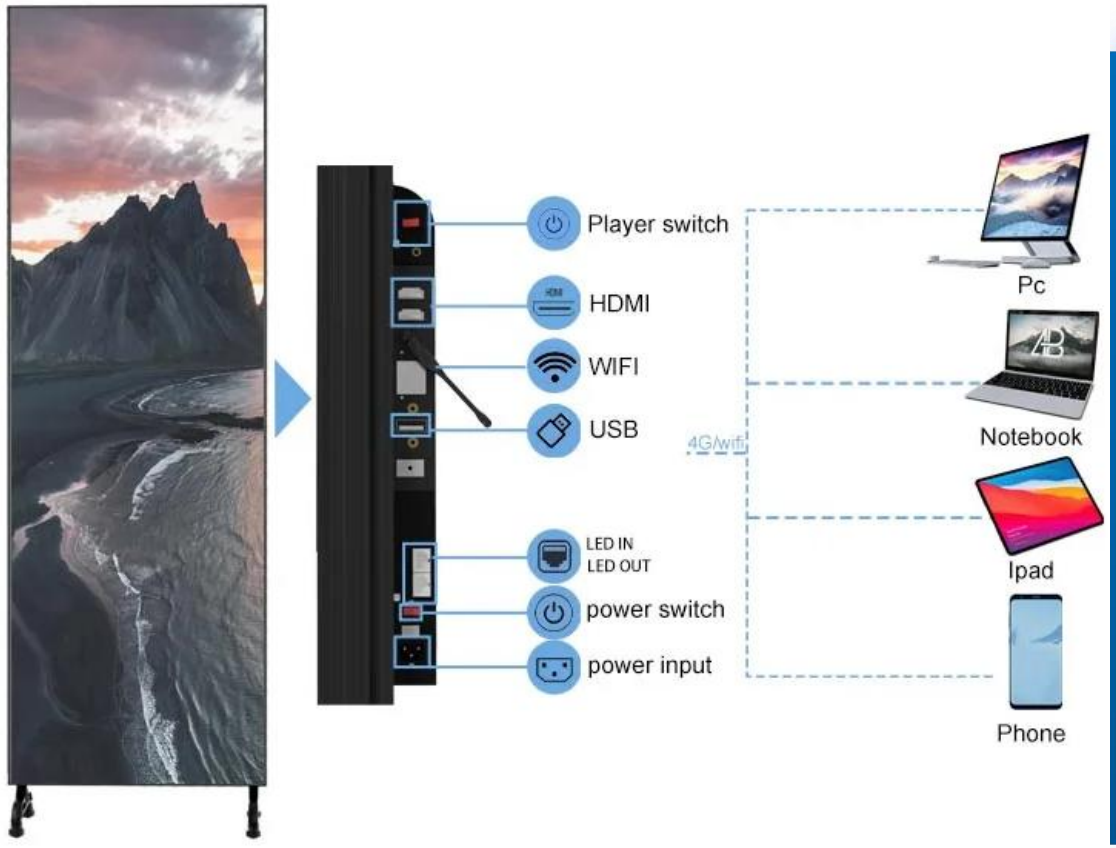

Synchronous or asynchronous control: Each poster screen has its own asynchronous TB1 processor and can be controlled by mobile phone/computer/3G/4G/Wi Fi/USB disc/LAN/cloud cluster control.

Hardware integrated with control card and 4G router: Videos and photos can be uploaded by 3G,4G,WIFI,USB Disk, it can also be controlled by phone APP and LAN.

Packaging

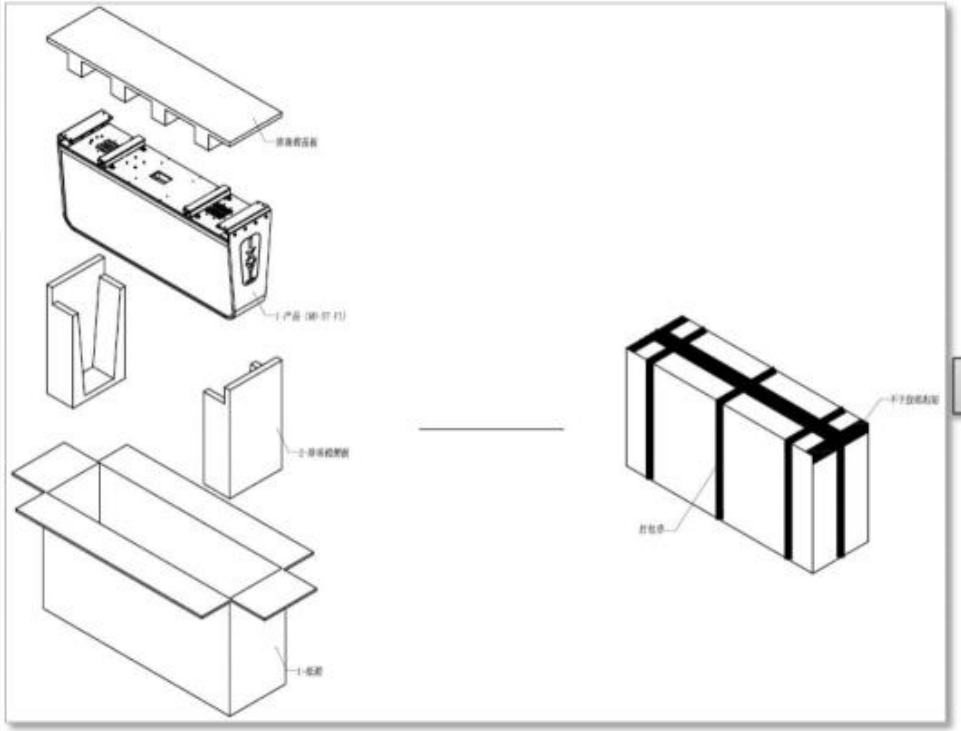

Remark:

Size:1950mm(L)x680mm(W)x45mm(H).

Actual package size would be changed according to the screen size.

Service

- Quality: we have a strict quality control system. All displays will undergo aging tests for 24hours at least.
- Logo : your logo can be printed on the cabinet
- Package: support for wooden package and flight case both.
- MOQ: we accept sample order in small sqm , such as 1sqm , 2sqm.
- Warranty: 3 years , free spare parts & free technical support
- Lead time: 12 days after initial payment depsoited
- Payment method: T/T, Western Union