Shanghai Xiazhao Valve Co., LTD

ADD:No.6133, Huyi Road, Jiading District, Shanghai
Mobile:18018653319
Tel:021-69986139
Whatsapp:+8618018653319
Email:lee@ruisello.com
Website: www.ruisello.com

BALL VALVE SERIES

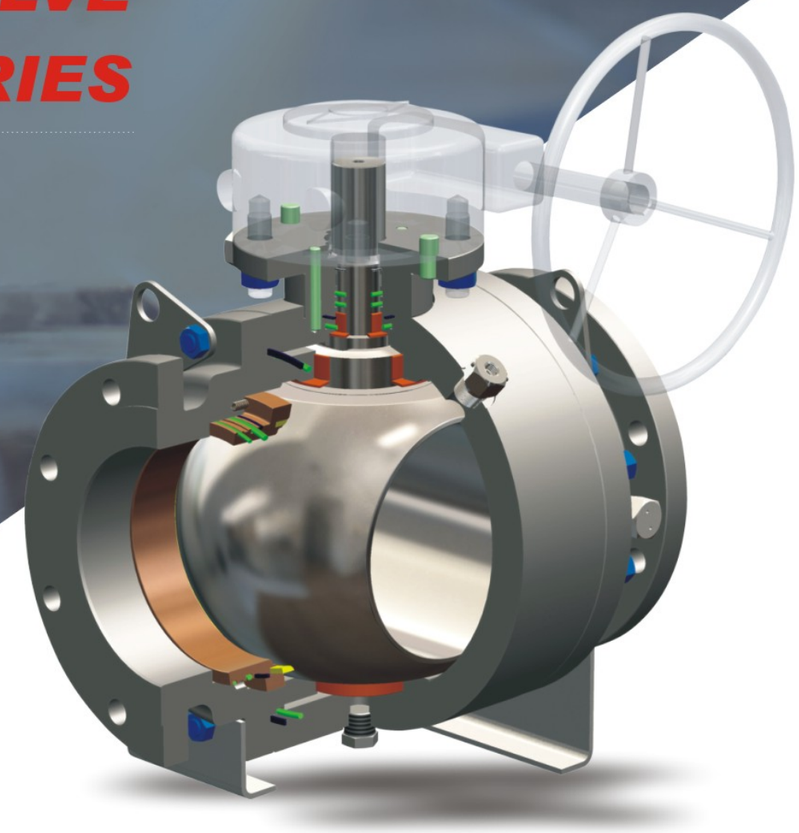

Shanghai Xiazhao Valve Co., LTD

COMPANY PROFILE

Shanghai Xiazhao Valve Co., Ltd. is an enterprise dedicated to the design, manufacture and sales of valves, which was founded on December 7,2017. Over the years, we have been adhering to the "quality first, service first" business philosophy, continuous innovation, enterprising, to provide customers with high-quality products and professional solutions. Today, we have become one of the leading valve manufacturers in China, and have a wide customer base in the country and some Asian and European countries.

Our products cover a variety of valves, including ball valve, gate valve, stop valve, butterfly valve, plunger valve and other series, suitable for the needs of different industries and fields. All products have passed strict quality control, to ensure that they have stable and reliable performance and life, and can meet various customer requirements and application scenarios. In addition, we can also customize the valves of different specifications and materials according to the specific needs of customers to meet the personalized needs.

In addition to the high-quality products, we also focus on providing comprehensive and thoughtful service. Our sales team and technical support team are composed of experienced and highly professional personnel, who can provide customers with timely and accurate consultation and after-sales support. We have also established a sound logistics system to ensure the timely delivery and safe transportation of products.

In the future, we will continue to uphold the " sincere: sincere, pragmatic, quality, quality, quality, innovation: aggressive, brave to explore, service: constantly improve, customer first concept, constantly optimize products and services, strengthen research and development and innovation, in order to enhance the core competitiveness of the enterprise. At the same time, we will also adhere to the concept of green environmental protection, committed to reducing the impact of production on the environment, and better fulfill our social responsibilities.

Finally, thank you for your attention and support to our enterprise. If you have any needs or questions, please feel free to contact us and we will provide you with the most valuable solution.

Contents

Ball Valve Series

Shanghai
Xiazhao Valve Co., LTD

Full-welded Trunnion Pipeline Ball Valve

Structure Features

- Fully welded construction
- Designed in conformity with API Spec. 6D
- Floating mounted, self–centering seating ring systems with pre–tensioned spring elements
- Trunnion–mounted Ball type
- Low torques
- Maintenance–free sealing and mounting systems
- Strength of seal determined by the pressure in the line double block and bleed
- Single piston design (SPE) with self– relieving seating rings
- Optional double piston design (DPE)
- Optional sealing system PMSS
- Dual and single adjustable trunnion seal
- Secondary injection of sealant
- Blow–out protection at trunnions
- Drain and vent connections
- No build–up of electrostatic charge
- Optional stem extension
- Fireproof design in conformity with API 6FA and BS 6755

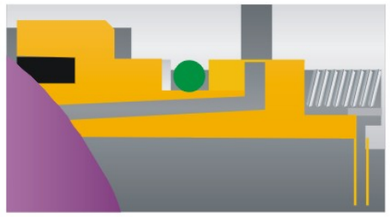

Sealing system: soft–seated

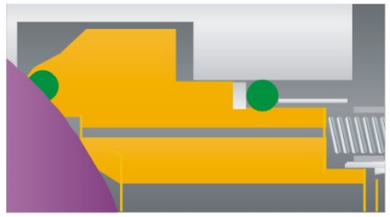

Sealing system: PMSS, primary metallic / secondary soft–seated

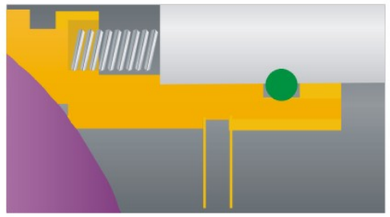

Sealing system: metal to metal

Design

All–welded body structure of the ball low body weight, their ideal body can handle the ball higher pressure and bending moment, able to withstand the high internal and external pressures. Choose different material combinations to ensure that the valve be reliable in corrosive situations, such as acidic gases.

Replaceable Trunnion Seal

The trunnion seals on our ball valve can be replaced even when the pipeline is under maximum pressure.

The modular design enables us to provide various trunnion seal systems to meet your specific requirements.

Full-welded Trunnion Pipeline Ball Valve Spherical Body Type

Technical Specifications

Design Basis		GB		API		ASME
Design Standard		GB/T 12237	GB/T 19672	API 6D		ASME B16.34
Face-to-Face		GB/T 12221	GB/T 19672	API 6D		ASME B16.10
Connection End	Flanged	GB/T 9113		ASME B16.5/MSS SP-44/ASME B16.47[a]		
	Butt-Welding	GB/T 12224		ASME B16.25		
Material		NACE MR0175				
Test and Inspection		JB/T 9092	GB/T 19672	API 598	API 6D	ASME B16.34
Fire Test		JB/T 6899		API 6FA/API607		

The dimension of welded end connection can be designed and manufactured according to the buyers's request.

a.MSS SP-44 for size 22.
ASME B16.47 Series A for size 26 & over.

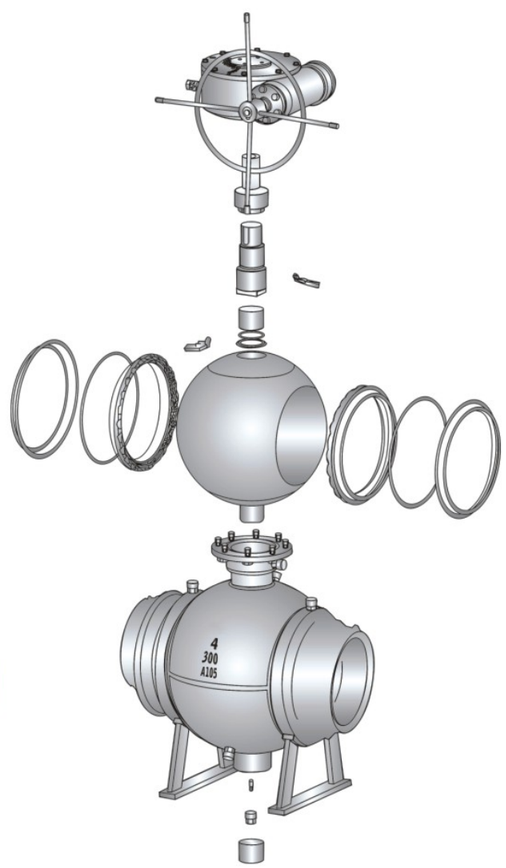

Full-welded Trunnion Pipeline Ball Valve Spherical Body Type

Main Parts and Materials

Conventional Type

Part Name	Carbon Steel		Low Temp. Steel		Stainless Steel	
	GB	ASTM	GB	ASTM	GB	ASTM
Body	A105	A105	0Cr18Ni9	A350-LF2	0Cr18Ni9 00Cr17Ni12Mo2	A182-F304 A182-F316
Bolt/Nut	35CrMo 45	A193-B7 A194-2H	304 304	A320-L7 A194-4	304 304	A193-B8 A194-8
Ball	25+ENP	A105+ENP	0Cr18Ni9	A350-LF2+ENP	0Cr18Ni9 00Cr17Ni12Mo2	A182-F304 A182-F316
Stem	1Cr13 2Cr13	A276-410 A276-420	304	A350-LF2 A276-304	304 316	A276-304 A276-316
Seat	25+ENP	A105+ENP	304	A350 LF2+ENP	0Cr18Ni9 00Cr17Ni12Mo2	A182-F304 A182-F316
Seat insert	Standard: PTFE/NYLON Special: PEEK/DEVLON/VITON		Standard: PTFE/NYLON Special: PEEK/DEVLON/VITON		Standard: PTFE/NYLON Special: PEEK/DEVLON/VITON	
O-Ring	NBR OR VITON		NBR OR VITON		VITON	
Gasket	Graphite+ Stainless steel		Graphite+ Stainless steel		Graphite+ Stainless steel	

Main Parts and Materials

Sulfur-resisting type

Part Name	Carbon Steel		Low Temp. Steel		Stainless Steel	
	GB	ASTM	GB	ASTM	GB	ASTM
Body	A105	A105	0Cr18Ni9	A350-LF2	0Cr18Ni9 00Cr17Ni12Mo2	A182-F304 A182-F316
Bolt/Nut	35CrMo 45	A193-B7 A194-2H	304 304	A320-L7 A194-4	304 304	A193-B8 A194-8
Ball	25+ENP	A105+ENP	0Cr18Ni9	A350-LF2+ENP	0Cr18Ni9 00Cr17Ni12Mo2	A182-F304 A182-F316
Stem	17-4PH		For use at low temperatures resilient steels.		304 316	A276-304 A276-316
Seat	25+ENP	A105+ENP	304	A350 LF2+ENP	0Cr18Ni9 00Cr17Ni12Mo2	A182-F304 A182-F316
Seat insert	Standard: PTFE/NYLON Special: PEEK/DEVLON/VITON		Standard: PTFE/NYLON Special: PEEK/DEVLON/VITON		Standard: PTFE/NYLON Special: PEEK/DEVLON/VITON	
O-Ring	NBR OR VITON		NBR OR VITON		VITON	
Gasket	Graphite+ Stainless steel		Graphite+ Stainless steel		Graphite+ Stainless steel	

Full-welded Trunnion Pipeline Ball Valve Spherical Body Type

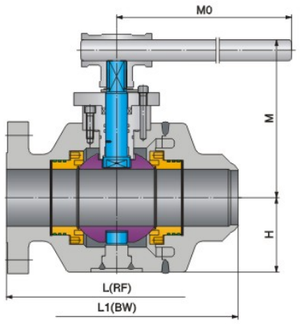

Lever–Operated

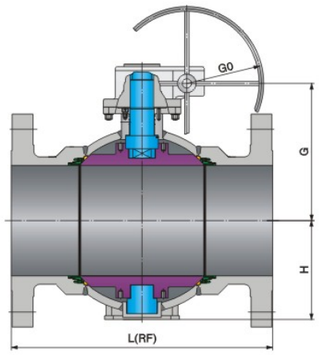

Worm Gear Operated

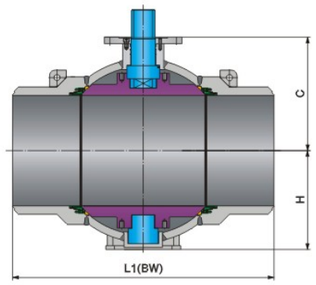

Bare Stem with Mounting Pad

Main External Dimensions

PN16/PN20/Class150

- Full Bore — Unit: mm

DN	NPS	L (RF)	L1 (BW)	MA		GA		C	H	WT(Kg)		Torque (N·M)
				M	M0	B	B0			Flange	BW	
50	2	178	216	161	250	--	--	103	100	18	20	57
65	2 1/2	191	241	178	300	--	--	115	110	22	24.5	71
80	3	203	283	189	350	--	--	129	130	28	34	95
100	4	229	305	214	500	--	--	147	151	52	45	192
150	6	394	457	265	800	261	400	194	201	91	102	485
200	8	457	521	--	--	319	400	252	254	194	204	832
250	10	533	559	--	--	369	400	303	308	320	295	1105
300	12	610	635	--	--	512	500	424	368	549	499	1655
350	14	686	762	--	--	537	500	450	372	603	558	2695
400	16	762	838	--	--	572	600	485	407	749	703	3164
450	18	864	914	--	--	665	600	564	489	1055	998	3793
500	20	914	991	--	--	705	600	603	529	1501	1252	5500
550	22	991	1092	--	--	742	600	641	566	1578	1592	6650
600	24	1067	1143	--	--	778	700	676	602	2096	1932	7529
650	26	1143	1245	--	--	872	700	752	673	2903	2540	8693
700	28	1245	1346	--	--	907	700	787	708	3266	2948	10770
750	30	1295	1397	--	--	949	700	829	750	4309	3992	12365
800	32	1372	1524	--	--	978	700	860	786	5060	4598	14070
850	34	1473	1626	--	--	1016	700	896	817	6123	5443	21148
900	36	1524	1727	--	--	1057	700	936	858	6972	6577	22987
1000	40	1753	1956	--	--	1276	700	1124	1020	8222	7476	26059
1050	42	1855	2083	--	--	1318	800	1166	1061	9595	8709	28149
1200	48	2134	2388	--	--	1425	800	1271	1166	13556	12437	42776
1400	56	2489	2489	--	--	1515	800	1360	1280	21301	19773	65654
1500	60	2640	2640	--	--	1585	1000	1430	1350	--	--	85654
1600	64	--	--	--	--	--	--	--	--	--	--	--

Full-welded Trunnion Pipeline Ball Valve Spherical Body Type

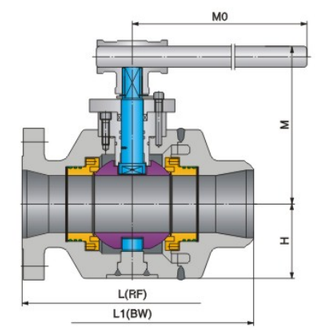

Lever–Operated

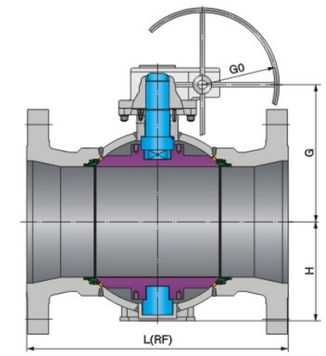

Worm Gear Operated

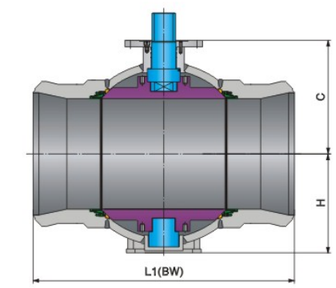

Bare Stem with Mounting Pad

Main External Dimensions

PN16/PN20/Class150

缩径 Reduced Bore — Unit: mm

DN×DN'	NPS×NPS'	L (RF)	L1 (BW)	MA		GA		C	H	WT(Kg)		Torque (N·M)
				M	M0	B	B0			Flange	BW	
80×50	3×2	203	283	161	250	--	--	103	100	25	23	57
100×80	4×3	229	305	189	350	--	--	129	130	45	39	95
150×100	6×4	394	457	214	500	--	--	147	151	77	68	192
200×150	8×6	457	521	265	800	261	400	194	201	156	132	485
250×200	10×8	533	559	--	--	319	400	252	254	281	238	832
300×250	12×10	610	635	--	--	369	400	303	308	431	381	1105
350×250	14×10	686	762	--	--	369	400	303	308	505	455	1105
350×300	14×12	686	762	--	--	512	500	424	368	581	526	1655
400×300	16×12	762	838	--	--	512	500	424	368	625	585	1655
400×350	16×14	762	838	--	--	537	500	450	372	678	623	2695
450×350	18×14	864	914	--	--	537	500	450	372	745	715	2695
450×400	18×16	864	914	--	--	572	600	485	407	805	771	3164
500×400	20×16	914	991	--	--	572	600	485	407	988	888	3164
500×450	20×18	914	991	--	--	665	600	564	489	1223	1143	3793
600×500	24×20	1067	1143	--	--	705	600	603	529	1785	1483	5500
750×600	30×24	1295	1397	--	--	778	700	676	602	2796	2356	7529
900×750	36×30	1524	1727	--	--	949	700	829	750	5109	4465	12365

Full-welded Trunnion Pipeline Ball Valve Spherical Body Type

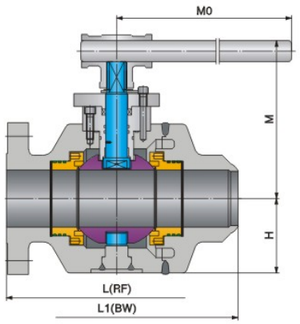

Lever–Operated

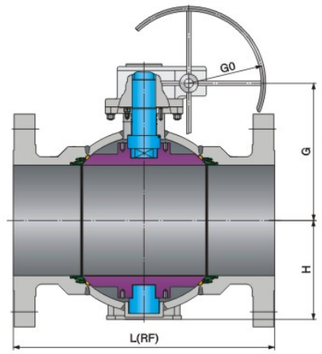

Worm Gear Operated

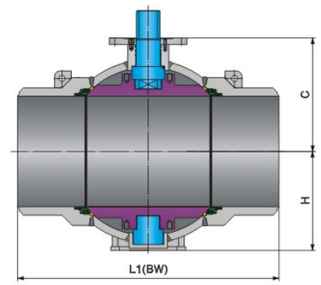

Bare Stem with Mounting Pad

Main External Dimensions

PN25/PN40/PN50/Class300

Full Bore — Unit: mm

DN	NPS	L (RF)	L1 (BW)	MA		GA		C	H	WT(Kg)		Torque (N·M)
				M	M0	B	B0			Flange	BW	
50	2	216	216	161	250	--	--	103	100	23	20	99
65	$2^1/_2$	241	241	178	300	--	--	115	110	27	29	124
80	3	283	283	189	350	--	--	129	130	36	34	212
100	4	305	305	214	500	--	--	147	151	57	45	335
150	6	457	457	265	800	261	400	194	201	113	102	544
200	8	502	521	--	--	319	400	252	254	206	204	1250
250	10	568	559	--	--	369	400	303	308	340	295	1736
300	12	648	635	--	--	512	500	424	368	578	499	2388
350	14	762	762	--	--	537	500	450	372	621	558	3224
400	16	838	838	--	--	572	600	485	407	782	703	5139
450	18	914	914	--	--	665	600	564	489	1225	998	7970
500	20	991	991	--	--	705	600	603	529	1542	1252	10570
550	22	1092	1092	--	--	742	600	641	566	1837	1592	12140
600	24	1143	1143	--	--	778	700	676	602	2445	1932	17240
650	26	1245	1245	--	--	872	700	752	673	3005	2540	20340
700	28	1346	1346	--	--	907	700	787	708	3504	2948	25069
750	30	1397	1397	--	--	949	700	829	750	4536	3992	27640
800	32	1524	1524	--	--	978	700	860	786	5402	4758	29550
850	34	1626	1626	--	--	1016	700	896	817	6668	5443	31558
900	36	1727	1727	--	--	1057	700	936	858	7494	7031	35170
1000	40	1956	1956	--	--	1276	700	1124	1020	9584	8776	39115
1050	42	2083	2083	--	--	1318	800	1166	1061	11084	9709	42414
1200	48	2170	2170	--	--	1425	800	1271	1166	15092	13037	71868
1400	56	2743	2743	--	--	1515	1000	1360	1280	22905	20773	108550

Full-welded Trunnion Pipeline Ball Valve Spherical Body Type

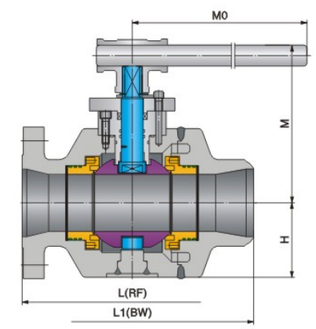

Lever–Operated

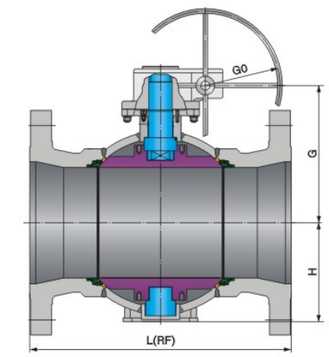

Worm Gear Operated

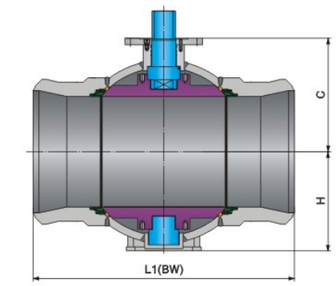

Bare Stem with Mounting Pad

Main External Dimensions

PN25/PN40/PN50/Class300

Reduced Bore — Unit: mm

DN×DN'	NPS×NPS'	L (RF)	L1 (BW)	MA		GA		C	H	WT(Kg)		Torque (N·M)
				M	M0	B	B0			Flange	BW	
80×50	3×2	283	283	161	250	--	--	103	100	29	23	99
100×80	4×3	305	305	189	350	--	--	129	130	43	39	212
150×100	6×4	457	457	214	500	--	--	147	151	82	68	335
200×150	8×6	502	521	265	800	261	400	194	201	166	132	544
250×200	10×8	568	559	--	--	319	400	252	254	295	238	1250
300×250	12×10	648	635	--	--	369	400	303	308	476	381	1736
350×250	14×10	762	762	--	--	369	400	303	308	528	445	1736
350×300	14×12	762	762	--	--	512	500	424	368	583	526	2388
400×300	16×12	838	838	--	--	512	500	424	368	658	586	2388
400×350	16×14	838	838	--	--	537	500	450	372	753	633	3224
450×350	18×14	914	914	--	--	537	500	450	372	815	705	3224
450×400	18×16	914	914	--	--	572	600	485	407	903	771	5139
500×400	20×16	991	991	--	--	572	600	485	407	1105	923	5139
500×450	20×18	991	991	--	--	665	600	564	489	1406	1043	7970
600×500	24×20	1143	1143	--	--	705	600	603	529	2142	1632	10570
750×600	30×24	1397	1397	--	--	778	700	676	602	3145	2545	17240
900×750	36×30	1727	1727	--	--	949	700	829	750	5536	4945	27640

Full-welded Trunnion Pipeline Ball Valve Spherical Body Type

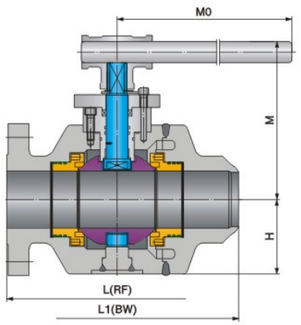

Lever–Operated

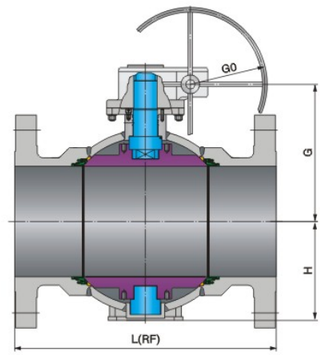

Worm Gear Operated

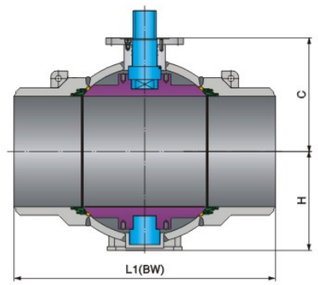

Bare Stem with Mounting Pad

Main External Dimensions

PN63/PN64/Class400

Full Bore **Unit: mm**

DN	NPS	L (RF)	L1 (BW)	L2 (RTJ)	MA		GA		C	H	WT(Kg)		Torque (N·M)
					M	M0	B	B0			Flange	BW	
50	2	292	292	295	161	500	--	--	103	100	27	20	124
65	2 1/2	330	330	333	178	600	--	--	115	112	31	27	155
80	3	356	356	359	189	700	--	--	129	130	39	34	265
100	4	406	406	410	214	800	--	--	147	151	68	45	467
150	6	495	495	498	265	800	261	400	194	201	136	102	650
200	8	597	597	600	--	--	319	400	252	254	249	204	1806
250	10	673	673	676	--	--	369	500	303	308	386	295	2638
300	12	762	762	765	--	--	512	500	424	368	635	499	2929
350	14	826	826	829	--	--	537	500	450	382	748	558	3971
400	16	902	902	905	--	--	629	500	528	453	1009	803	6307
450	18	978	978	981	--	--	665	600	564	489	1293	998	9165
500	20	1054	1054	1060	--	--	762	600	641	562	1701	1361	12155
550	22	1143	1143	1153	--	--	801	600	680	600	2155	1792	15175
600	24	1232	1232	1241	--	--	837	600	716	636	2540	2155	21550
650	26	1308	1308	1321	--	--	872	700	752	673	3221	2540	25426
700	28	1397	1397	1410	--	--	907	700	787	708	3883	2948	31336
750	30	1524	1524	1537	--	--	949	800	829	750	4808	4002	34550
800	32	1651	1651	1667	--	--	1050	800	915	822	5925	4983	36937
850	34	1778	1778	1794	--	--	1151	800	998	894	6985	5679	39447
900	36	1880	1880	1895	--	--	1192	800	1039	935	8165	7131	43962
1000	40	1981	1981	--	--	--	1276	800	1124	1020	11567	10092	48894
1050	42	2057	--	--	--	--	1318	800	1166	1061	13041	11226	50300
1200	48	2311	--	--	--	--	1508	1000	1372	1219	17592	15286	80302

Full-welded Trunnion Pipeline Ball Valve Spherical Body Type

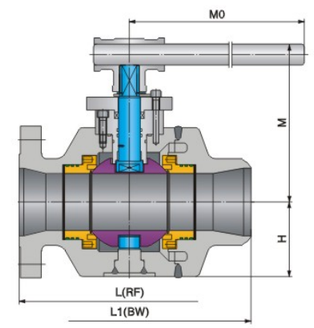

Lever–Operated

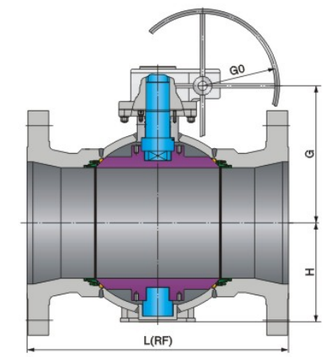

Worm Gear Operated

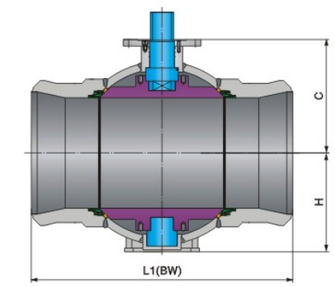

Bare Stem with Mounting Pad

Main External Dimensions

PN63/PN64/Class400

Reduced Bore **Unit: mm**

DN×DN'	NPS×NPS'	L (RF)	L1 (BW)	L2 (RTJ)	MA		GA		C	H	WT(Kg)		Torque (N·M)
					M	M0	B	B0			Flange	BW	
80×50	3×2	356	356	359	161	500	--	--	103	100	36	23	124
100×80	4×3	406	406	410	189	700	--	--	129	130	57	39	265
150×100	6×4	495	495	498	214	800	--	--	147	151	86	68	467
200×150	8×6	597	597	600	265	800	261	400	194	201	192	132	650
250×200	10×8	673	673	676	--	--	319	400	252	254	276	238	1806
300×250	12×10	762	762	765	--	--	369	500	303	308	463	381	2638
350×250	14×10	826	826	829	--	--	369	500	303	308	598	455	2638
350×300	14×12	826	826	829	--	--	512	500	424	368	676	526	2929
400×300	16×12	902	902	905	--	--	512	500	424	368	756	560	2929
400×350	16×14	902	902	905	--	--	537	500	450	382	866	603	3971
450×350	18×14	978	978	981	--	--	537	500	450	382	976	741	3971
450×400	18×16	978	978	981	--	--	629	500	528	453	1089	871	6307
500×400	20×16	1054	1054	1060	--	--	629	500	528	453	1225	1005	6307
500×450	20×18	1054	1054	1060	--	--	665	600	564	489	1451	1202	9165
600×500	24×20	1232	1232	1241	--	--	762	600	641	562	2201	1750	12155
750×600	30×24	1524	1524	1537	--	--	837	600	716	636	3440	2640	21550
900×750	36×30	1880	1880	1895	--	--	949	800	829	750	5943	4983	34550

Full-welded Trunnion Pipeline Ball Valve Spherical Body Type

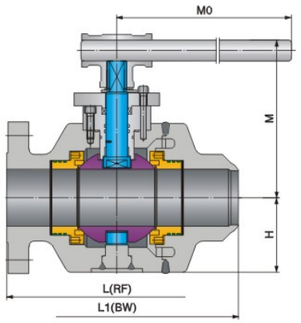

Lever–Operated

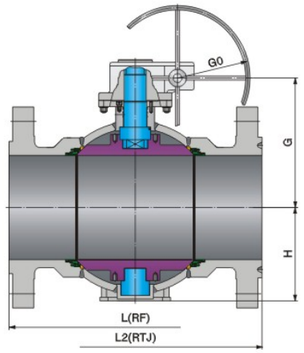

Worm Gear Operated

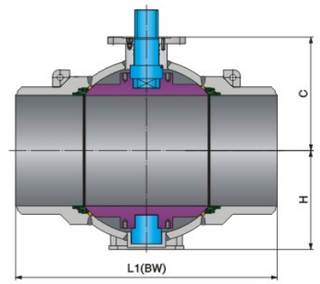

Bare Stem with Mounting Pad

Main External Dimensions

PN100/PN110/Class600

Full Bore — **Unit: mm**

DN	NPS	L (RF)	L1 (BW)	L2 (RTJ)	MA		GA		C	H	WT(Kg)		Torque (N·M)
					M	M0	B	B0			Flange	BW	
50	2	292	292	295	161	500	--	--	103	100	27	20	168
65	2 1/2	330	330	333	178	600	--	--	115	112	31	25	210
80	3	356	356	359	189	700	--	--	129	130	39	34	360
100	4	432	432	435	214	800	--	--	147	151	75	45	572
150	6	559	559	562	265	800	261	400	194	201	163	102	912
200	8	660	660	664	--	--	319	400	252	254	295	204	2177
250	10	787	787	791	--	--	369	500	303	308	454	295	3093
300	12	838	838	841	--	--	512	500	424	368	685	499	4282
350	14	889	889	892	--	--	537	500	450	382	866	558	7458
400	16	991	991	994	--	--	629	500	528	453	1089	803	9310
450	18	1092	1092	1095	--	--	665	600	564	489	1340	998	14693
500	20	1194	1194	1200	--	--	762	600	641	562	1860	1361	20011
550	22	1295	1295	1305	--	--	801	600	680	600	2449	1792	24785
600	24	1397	1397	1407	--	--	837	600	716	636	2971	2155	31226
650	26	1448	1448	1461	--	--	872	700	752	673	3538	2540	35184
700	28	1549	1549	1562	--	--	1041	700	889	784	4309	3039	38987
750	30	1651	1651	1664	--	--	1083	800	931	826	5443	4137	41832
800	32	1778	1778	1794	--	--	1102	800	958	860	6285	4850	63865
850	34	1930	1930	1946	--	--	1151	800	998	894	7269	5579	71720
900	36	2083	2083	2099	--	--	1292	1000	1039	935	8664	7031	89020
1000	40	2337	2337	2366	--	--	1408	1000	1220	1067	12143	10433	109900
1050	42	2439	2439	2467	--	--	1449	1000	1262	1109	13835	11567	121165
1200	48	2540	2540	2540	--	--	1609	1000	1435	1300	18511	15011	145345
1400	56	2949	2949	2949	--	--	1785	1000	1615	1505	27858	25358	169230

Full-welded Trunnion Pipeline Ball Valve Spherical Body Type

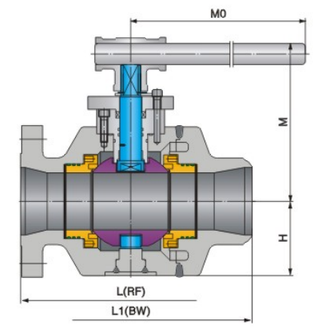

Lever–Operated

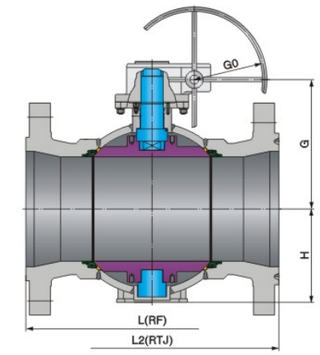

Worm Gear Operated

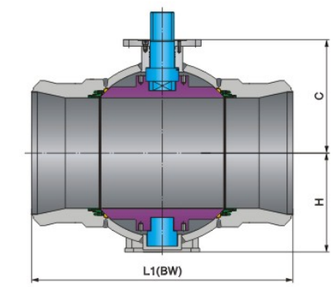

Bare Stem with Mounting Pad

Main External Dimensions

PN100/PN110/Class600

Reduced Bore — **Unit: mm**

DN×DN'	NPS×NPS'	L (RF)	L1 (BW)	L2 (RTJ)	MA		GA		C	H	WT(Kg)		Torque (N·M)
					M	M0	B	B0			Flange	BW	
80×50	3×2	356	356	359	161	500	--	--	103	100	36	23	168
100×80	4×3	432	432	435	189	700	--	--	129	130	68	39	360
150×100	6×4	559	559	562	214	800	--	--	147	151	113	68	572
200×150	8×6	660	660	664	265	800	261	400	194	201	213	132	912
250×200	10×8	787	787	791	--	--	319	400	252	254	386	238	2177
300×250	12×10	838	838	841	--	--	369	500	303	308	522	381	3093
350×250	14×10	889	889	892	--	--	369	500	303	308	635	455	3093
350×300	14×12	889	889	892	--	--	512	500	424	368	744	526	4282
400×300	16×12	991	991	994	--	--	512	500	424	368	878	615	4282
400×350	16×14	991	991	994	--	--	537	500	450	382	1009	703	7458
450×350	18×14	1092	1092	1095	--	--	537	500	450	382	1095	780	7458
450×400	18×16	1092	1092	1095	--	--	629	500	528	453	1179	871	9310
500×400	20×16	1194	1194	1200	--	--	629	500	528	453	1320	1050	9310
500×450	20×18	1194	1194	1200	--	--	665	600	564	489	1588	1202	14693
600×500	24×20	1397	1397	1407	--	--	762	600	641	562	2680	2080	20011
750×600	30×24	1651	1651	1664	--	--	837	600	716	636	4277	2971	31226
900×750	36×30	2083	2083	2099	--	--	1083	800	931	826	7077	5643	41832

Full-welded Trunnion Pipeline Ball Valve Spherical Body Type

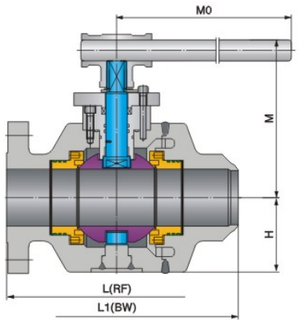

Lever–Operated

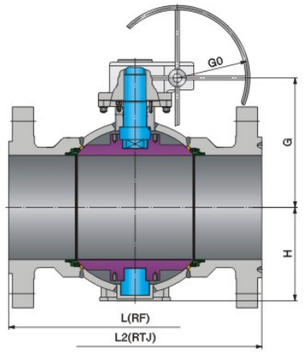

Worm Gear Operated

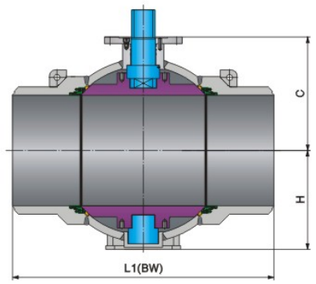

Bare Stem with Mounting Pad

Main External Dimensions

PN150/PN160/Class900

Full Bore **Unit: mm**

DN	NPS	L (RF)	L1 (BW)	L2 (RTJ)	MA		GA		C	H	WT(Kg)		Torque (N·M)
					M	M0	B	B0			Flange	BW	
50	2	368	368	371	161	650	--	--	103	100	45	20	228
65	$2^1/_2$	419	419	422	178	800	--	--	116	110	53	35	263
80	3	381	381	384	189	800	--	--	131	124	64	54	512
100	4	457	457	460	--	--	248	400	168	172	113	86	946
150	6	610	610	613	--	--	276	400	209	213	238	186	1784
200	8	737	737	740	--	--	429	500	252	254	549	268	4116
250	10	838	838	841	--	--	507	500	382	327	601	458	5910
300	12	965	965	968	--	--	554	500	424	368	1021	612	10137
350	14	1029	1029	1038	--	--	643	500	522	442	1474	977	14141
400	16	1130	1130	1140	--	--	684	600	563	483	1814	1111	18866
450	18	1219	1219	1232	--	--	724	600	604	524	2404	1792	22400
500	20	1321	1321	1334	--	--	895	600	742	615	3221	2381	28544
550	22	--	--	--	--	--	--	--	--	--	--	--	--
600	24	1549	1549	1568	--	--	970	700	817	713	4763	2926	43276
650	26	1651	1651	1673	--	--	998	700	845	743	5285	3245	48580
700	28	1753	1753	1775	--	--	1035	800	882	880	6511	4230	60000
750	30	1880	1880	1902	--	--	1083	1000	931	826	7938	5216	76000
800	32	2032	2032	2054	--	--	1155	1000	1003	905	9037	6355	90195
850	34	2159	2159	2188	--	--	1210	1000	1058	940	10357	7486	100460
900	36	2286	2286	2315	--	--	1322	1000	1134	981	11612	8538	131875

Full-welded Trunnion Pipeline Ball Valve Spherical Body Type

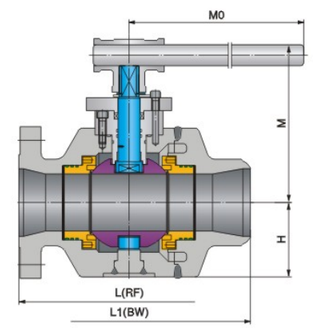

Lever–Operated

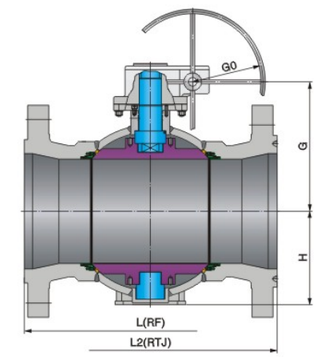

Worm Gear Operated

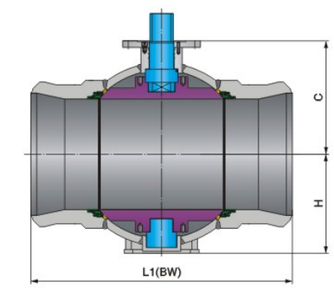

Bare Stem with Mounting Pad

Main External Dimensions

PN150/PN160/Class900

Reduced Bore **Unit: mm**

DN×DN'	NPS×NPS'	L (RF)	L1 (BW)	L2 (RTJ)	MA		GA		C	H	WT(Kg)		Torque (N·M)
					M	M0	B	B0			Flange	BW	
80×50	3×2	381	381	384	161	650	--	--	103	100	54	32	228
100×80	4×3	457	457	460	189	800	--	--	131	124	86	68	512
150×100	6×4	610	610	613	--	--	248	400	168	172	181	118	946
200×150	8×6	737	737	740	--	--	276	400	209	213	386	295	1784
250×200	10×8	838	838	841	--	--	429	500	252	254	585	329	4116
300×250	12×10	965	965	968	--	--	507	500	382	327	771	503	5910
350×250	14×10	1029	1029	1038	--	--	507	500	382	327	1101	621	5910
350×300	14×12	1029	1029	1038	--	--	554	500	424	368	1247	762	10137
400×300	16×12	1130	1130	1140	--	--	554	500	424	368	1521	921	10137
400×350	16×14	1130	1130	1140	--	--	643	500	522	442	1656	1043	14141
450×350	18×14	1219	1219	1232	--	--	643	500	522	442	1814	1241	14141
450×400	18×16	1219	1219	1232	--	--	684	600	563	483	2414	1930	18866
500×400	20×16	1321	1321	1334	--	--	684	600	563	483	--	--	18866
500×450	20×18	1321	1321	1334	--	--	724	600	604	524	--	--	22400
600×500	24×20	1549	1549	1568	--	--	895	600	742	615	--	--	28544
750×600	30×24	1880	1880	1902	--	--	970	700	817	713	--	--	43276
900×750	36×30	2286	2286	2315	--	--	1083	1000	931	826	--	--	76000

Full-welded Trunnion Pipeline Ball Valve Spherical Body Type

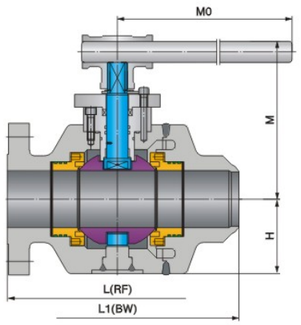

Lever–Operated

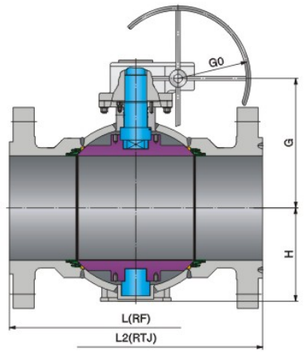

Worm Gear Operated

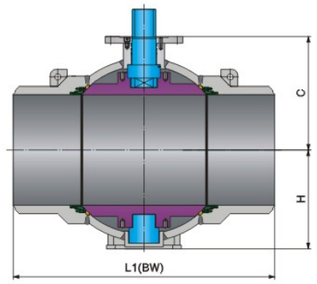

Bare Stem with Mounting Pad

Main External Dimensions

PN250/PN260/Class1500

Full Bore — Unit: mm

DN	NPS	L (RF)	L1 (BW)	L2 (RTJ)	MA		GA		C	H	WT(Kg)		Torque (N·M)
					M	M0	B	B0			Flange	BW	
50	2	368	368	371	161	800	--	--	103	100	45	20	390
65	$2^1/_2$	419	419	422	175	800	--	--	115	110	62	35	448
80	3	470	470	473	189	1000	--	--	131	124	82	54	931
100	4	546	546	549	--	--	248	500	168	172	136	86	1524
150	6	705	705	711	--	--	276	500	209	213	324	186	2934
200	8	832	832	841	--	--	429	500	342	278	703	488	7215
250	10	991	991	1000	--	--	507	500	405	385	907	714	10990
300	12	1130	1130	1146	--	--	554	500	452	440	1474	828	16103
350	14	1257	1257	1276	--	--	643	500	522	442	1905	1157	24518
400	16	1384	1384	1407	--	--	684	600	563	483	2449	1338	29630
450	18	1537	1537	1559	--	--	856	600	704	576	2880	2325	34392
500	20	1664	1664	1686	--	--	895	700	742	615	4200	2733	40918
550	22	--	--	--	--	--	--	--	--	--	--	--	--
600	24	--	--	1972	--	--	970	800	817	713	7371	4264	65351

Reduced Bore — Unit: mm

DN×DN'	NPS×NPS'	L (RF)	L1 (BW)	L2 (RTJ)	MA		GA		C	H	WT(Kg)		Torque (N·M)
					M	M0	B	B0			Flange	BW	
80×50	3×2	470	470	473	161	800	--	--	103	100	68	32	390
100×80	4×3	546	546	549	189	1000	--	--	131	124	109	68	931
150×100	6×4	705	705	711	--	--	248	500	168	172	249	118	1524
200×150	8×6	832	832	841	--	--	276	500	209	213	465	295	2934
250×200	10×8	991	991	1000	--	--	429	500	342	278	782	544	7215
300×250	12×10	1130	1130	1146	--	--	507	500	405	385	1275	748	10990
350×250	14×10	1257	1257	1276	--	--	507	500	405	385	1450	850	10990
350×300	14×12	1257	1257	1276	--	--	554	500	452	440	1701	953	16103
400×300	16×12	1384	1384	1407	--	--	554	500	452	440	2124	1156	16103
400×350	16×14	1384	1384	1407	--	--	643	500	522	442	2336	1236	24518

Full-welded Trunnion Pipeline Ball Valve Spherical Body Type

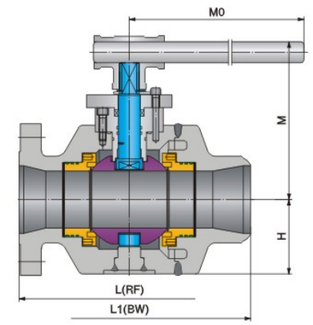

Lever–Operated

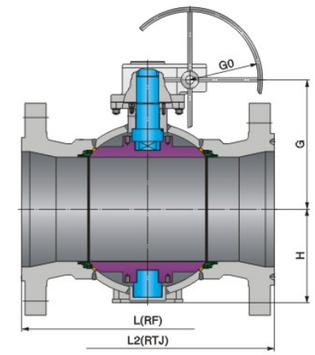

Worm Gear Operated

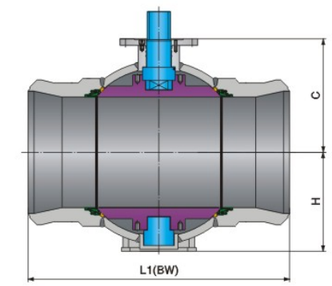

Bare Stem with Mounting Pad

Main External Dimensions

PN420/Class2500

Full Bore — Unit: mm

DN	NPS	L (RF)	L1 (BW)	L2 (RTJ)	MA		GA		C	H	WT(Kg)		Torque (N·M)
					M	M0	B	B0			Flange	BW	
50	2	451	451	454	184		--	--	119	115	52	43	589
65	$2^1/_2$	508	508	514	195	1000	--	--	130	128	78	62	736
80	3	578	578	584	227	1000	--	--	145	144	107	85	1577
100	4	673	673	683	--	--	297	500	175	184	214	173	1965
150	6	914	914	927	--	--	334	600	318	248	428	334	5501
200	8	1022	1022	1038	--	--	454	600	391	326	950	760	11786
250	10	1270	1270	1292	--	--	508	700	459	378	1325	983	13222
300	12	1422	1422	1445	--	--	629	800	498	423	2044	1478	20075

Reduced Bore — Unit: mm

DN×DN'	NPS×NPS'	L (RF)	L1 (BW)	L2 (RTJ)	MA		GA		C	H	WT(Kg)		Torque (N·M)
					M	M0	B	B0			Flange	BW	
80×50	3×2	578	578	584	184	800	--	--	119	115	71	59	589
100×80	4×3	673	673	683	227	1000	--	--	145	144	130	98	1577
150×100	6×4	914	914	927	--	--	297	500	175	184	289	233	1965
200×150	8×6	1022	1022	1038	--	--	334	600	318	248	588	461	5501
250×200	10×8	1270	1270	1292	--	--	454	600	391	326	1142	869	11786
300×250	12×10	1422	1422	1445	--	--	508	700	459	378	1618	1205	13222

Tube Shape Body Full Welded Trunnion Ball Valve

Technical Specifications

Design Basis		GB		API		ASME
Design Standard		GB/T 12237	GB/T 19672	API 6D		ASME B16.34
Face-to-Face		GB/T 12221	GB/T 19672	API 6D		ASME B16.10
Connection End	Flanged	GB/T 9113		ASME B16.5/MSS SP-44/ASME B16.47[a]		
	Butt-Welding	GB/T 12224		ASME B16.25		
Material		NACE MR0175				
Test and Inspection		JB/T 9092	GB/T 19672	API 598	API 6D	ASME B16.34
Fire Test		JB/T 6899		API 6FA/API607		

The dimension of welded end connection can be designed and manufactured according to the buyers's request.

a.MSS SP-44 for size 22.
ASME B16.47 Series A for size 26 & over.

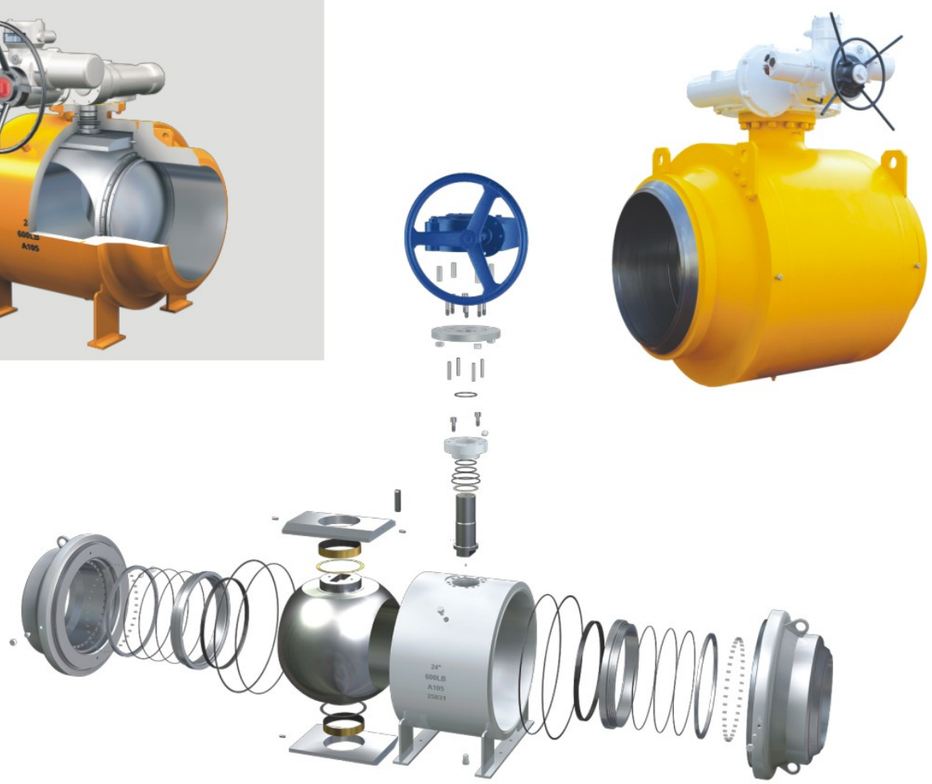

Tube Shape Body Full Welded Trunnion Ball Valve

Main Parts and Materials

Conventional Type

Part Name	Carbon Steel		Low Temp. Steel		Stainless Steel	
	GB	ASTM	GB	ASTM	GB	ASTM
Body	A105	A105	0Cr18Ni9	A350-LF2	0Cr18Ni9 00Cr17Ni12Mo2	A182-F304 A182-F316
Bolt/Nut	35CrMo 45	A193-B7 A194-2H	304 304	A320-L7 A194-4	304 304	A193-B8 A194-8
Ball	25+ENP	A105+ENP	0Cr18Ni9	A350-LF2+ENP	0Cr18Ni9 00Cr17Ni12Mo2	A182-F304 A182-F316
Stem	1Cr13 2Cr13	A276-410 A276-420	304	A350-LF2 A276-304	304 316	A276-304 A276-316
Seat	25+ENP	A105+ENP	304	A350 LF2+ENP	0Cr18Ni9 00Cr17Ni12Mo2	A182-F304 A182-F316
Seat insert	Standard:PTFE/NYLON Special:PEEK/DEVLON/VITON		Standard:PTFE/NYLON Special:PEEK/DEVLON/VITON		Standard:PTFE/NYLON Special:PEEK/DEVLON/VITON	
O-Ring	NBR OR VITON		NBR OR VITON		VITON	
Gasket	Graphite+ Stainless steel		Graphite+ Stainless steel		Graphite+ Stainless steel	

Main Parts and Materials

Sulfur-resisting type

Part Name	Carbon Steel		Low Temp. Steel		Stainless Steel	
	GB	ASTM	GB	ASTM	GB	ASTM
Body	A105	A105	0Cr18Ni9	A350-LF2	0Cr18Ni9 00Cr17Ni12Mo2	A182-F304 A182-F316
Bolt/Nut	35CrMo 45	A193-B7 A194-2H	304 304	A320-L7 A194-4	304 304	A193-B8 A194-8
Ball	25+ENP	A105+ENP	0Cr18Ni9	A350-LF2+ENP	0Cr18Ni9 00Cr17Ni12Mo2	A182-F304 A182-F316
Stem	17-4PH		For use at low temperatures resilient steels.		304 316	A276-304 A276-316
Seat	25+ENP	A105+ENP	304	A350 LF2+ENP	0Cr18Ni9 00Cr17Ni12Mo2	A182-F304 A182-F316
Seat insert	Standard:PTFE/NYLON Special:PEEK/DEVLON/VITON		Standard:PTFE/NYLON Special:PEEK/DEVLON/VITON		Standard:PTFE/NYLON Special:PEEK/DEVLON/VITON	
O-Ring	NBR OR VITON		NBR OR VITON		VITON	
Gasket	Graphite+ Stainless steel		Graphite+ Stainless steel		Graphite+ Stainless steel	

Tube Shape Body Full Welded Trunnion Ball Valve

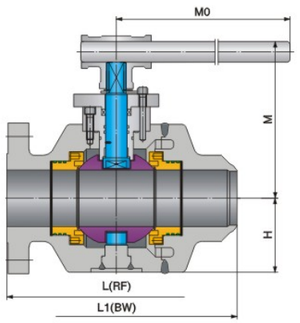

Lever–Operated

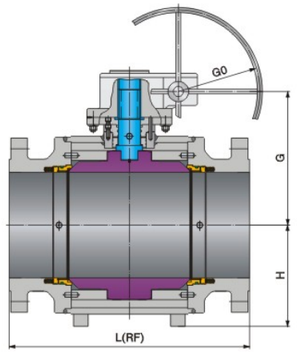

Worm Gear Operated

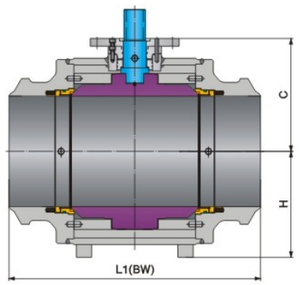

Bare Stem with Mounting Pad

Main External Dimensions

PN16/PN20/Class150

Full Bore — Unit: mm

DN	NPS	L (RF)	L1 (BW)	MA		GA		C	H	WT(Kg)	Torque (N·M)
				M	M0	B	B0				
50	2	178	216	161	250	--	--	105	100	28	57
65	2 1/2	191	241	178	300	--	--	130	110	39	71
80	3	203	283	189	350	185	280	155	125	49	95
100	4	229	305	214	500	235	280	200	160	88	192
150	6	394	457	265	800	325	300	250	185	160	485
200	8	457	521	--	--	390	400	278	222	248	832
250	10	533	559	--	--	445	400	323	280	379	1105
300	12	610	635	--	--	520	500	340	303	571	1655
350	14	686	762	--	--	550	500	375	330	759	2695
400	16	762	838	--	--	580	600	410	355	1150	3164
450	18	864	914	--	--	605	600	440	390	1192	3793
500	20	914	991	--	--	610	600	495	430	1769	5500
550	22	991	1092	--	--	670	600	525	475	2367	6650
600	24	1067	1143	--	--	725	700	585	520	3450	7529
650	26	1143	1245	--	--	760	700	630	560	4050	8693
700	28	1245	1346	--	--	790	700	645	650	4830	10770
750	30	1295	1397	--	--	825	700	690	700	5960	12365
800	32	1372	1524	--	--	870	700	740	745	7480	14070
850	34	1473	1626	--	--	910	700	760	775	8032	21148
900	36	1524	1727	--	--	950	700	810	805	9100	22987
1000	40	1753	1956	--	--	1005	700	895	900	14100	26059
1050	42	1790	2083	--	--	1045	800	950	935	15320	28149
1200	48	1995	2388	--	--	1235	800	1095	1070	22000	42776
1400	56	2489	2489	--	--	1450	800	1300	1250	34150	65654
1500	60	2640	2640	--	--	1550	1000	1380	1350	42500	85654
1600	64	--	--	--	--	--	--	--	--	--	--

Tube Shape Body Full Welded Trunnion Ball Valve

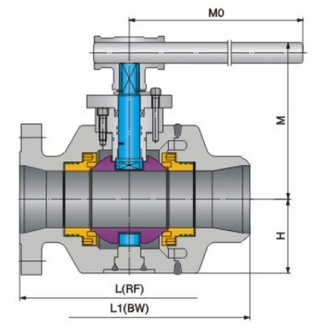

Lever–Operated

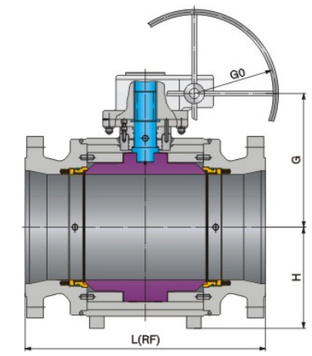

Worm Gear Operated

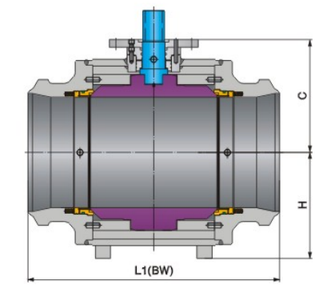

Bare Stem with Mounting Pad

Main External Dimensions

PN16/PN20/Class150

Reduced Bore — Unit: mm

DN×DN'	NPS×NPS'	L (RF)	L1 (BW)	MA		GA		C	H	WT(Kg)	Torque (N·M)
				M	M0	B	B0				
80×50	3×2	203	283	130	250	--	--	105	100	32	57
100×80	4×3	229	305	191	350	185	280	155	125	63	95
150×100	6×4	394	457	200	500	235	280	200	160	118	192
200×150	8×6	457	521	226	800	325	300	250	185	190	485
250×200	10×8	533	559	242	1000	390	400	278	222	290	832
300×250	12×10	610	635	--	--	445	400	323	280	465	1105
350×250	14×10	686	762	--	--	445	400	323	280	532	1105
350×300	14×12	686	762	--	--	520	500	340	303	622	1655
400×300	16×12	762	838	--	--	520	500	340	303	730	1655
400×350	16×14	762	838	--	--	550	500	375	330	830	2695
450×350	18×14	864	914	--	--	550	500	375	330	995	2695
450×400	18×16	864	914	--	--	580	600	410	355	1030	3164
500×400	20×16	914	991	--	--	580	600	410	355	1315	3164
500×450	20×18	914	991	--	--	605	600	440	390	1420	3793
600×500	24×20	1067	1143	--	--	610	600	495	430	2048	5500
750×600	30×24	1295	1397	--	--	725	700	585	520	3830	7529
900×750	36×30	1524	1727	--	--	825	700	690	700	7100	12365

Tube Shape Body Full Welded Trunnion Ball Valve

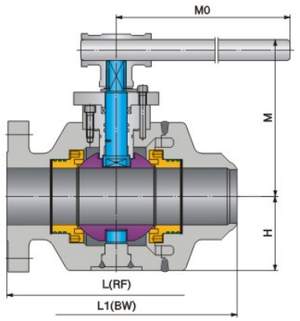

Lever–Operated

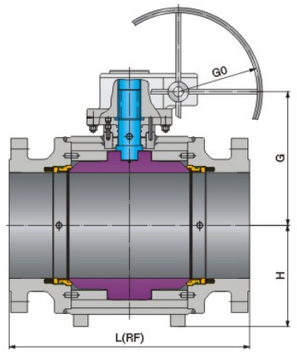

Worm Gear Operated

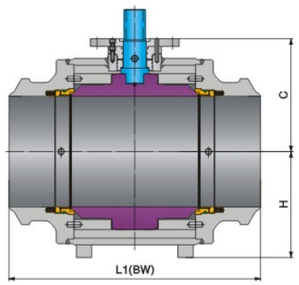

Bare Stem with Mounting Pad

Main External Dimensions

PN25/PN40/PN50/Class300

Full Bore **Unit: mm**

DN	NPS	L (RF)	L1 (BW)	MA		GA		C	H	WT(Kg)	Torque (N·M)
				M	M0	B	B0				
50	2	216	216	130	250	--	--	105	100	29	99
65	2 1/2	241	241	142	350	--	--	130	110	40	124
80	3	283	283	191	400	185	280	155	125	57	212
100	4	305	305	200	500	235	280	200	160	97	335
150	6	457	457	226	800	325	300	250	203	185	544
200	8	502	521	242	1000	390	400	278	232	287	1250
250	10	568	559	--	--	445	400	333	298	507	1736
300	12	648	635	--	--	520	500	360	333	740	2388
350	14	762	762	--	--	550	500	395	350	1038	3224
400	16	838	838	--	--	580	600	433	398	1452	5139
450	18	914	914	--	--	605	600	460	410	1648	7970
500	20	991	991	--	--	610	600	505	470	2207	10570
550	22	1092	1092	--	--	670	600	530	485	2797	12140
600	24	1143	1143	--	--	725	700	590	550	3940	17240
650	26	1245	1245	--	--	760	700	635	585	4670	20340
700	28	1346	1346	--	--	790	700	645	670	5780	25069
750	30	1397	1397	--	--	825	700	700	730	6600	27640
800	32	1524	1524	--	--	870	700	750	770	7940	29550
850	34	1626	1626	--	--	910	700	760	800	9100	31558
900	36	1727	1727	--	--	950	700	810	825	10150	35170
1000	40	1956	1956	--	--	1005	700	905	920	13800	39115
1050	42	2083	2083	--	--	1045	800	960	955	16120	42414
1200	48	2170	2170	--	--	1235	800	1100	1105	24070	71868
1400	56	2743	2743	--	--	1450	1000	1300	1275	38200	108550

Tube Shape Body Full Welded Trunnion Ball Valve

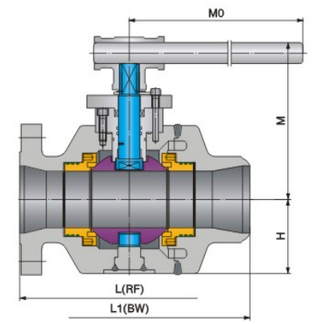

Lever–Operated

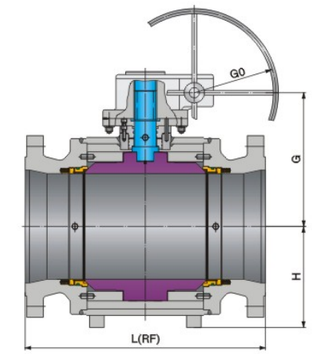

Worm Gear Operated

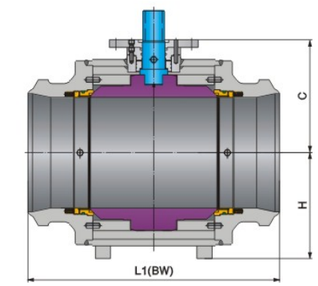

Bare Stem with Mounting Pad

Main External Dimensions

PN25/PN40/PN50/Class300

Reduced Bore **Unit: mm**

DN×DN'	NPS×NPS'	L (RF)	L1 (BW)	MA		GA		C	H	WT(Kg)	Torque (N·M)
				M	M0	B	B0				
80×50	3×2	283	283	130	250	--	--	105	100	34	99
100×80	4×3	305	305	191	400	185	280	155	125	65	212
150×100	6×4	457	457	200	500	235	280	200	160	118	335
200×150	8×6	502	521	226	800	325	300	250	203	222	544
250×200	10×8	568	559	242	1000	390	400	278	232	297	1250
300×250	12×10	648	635	--	--	445	400	333	298	507	1736
350×250	14×10	762	762	--	--	445	400	333	298	648	1736
350×300	14×12	762	762	--	--	520	500	360	333	820	2388
400×300	16×12	838	838	--	--	520	500	360	333	970	2388
400×350	16×14	838	838	--	--	550	500	395	350	1130	3224
450×350	18×14	914	914	--	--	550	500	395	350	1420	3224
450×400	18×16	914	914	--	--	580	600	433	398	1598	5139
500×400	20×16	991	991	--	--	580	600	433	398	1668	5139
500×450	20×18	991	991	--	--	605	600	460	410	1797	7970
600×500	24×20	1143	1143	--	--	610	600	505	470	2667	10570
750×600	30×24	1397	1397	--	--	725	700	590	550	4490	17240
900×750	36×30	1727	1727	--	--	825	700	700	730	8190	27640

Tube Shape Body Full Welded Trunnion Ball Valve

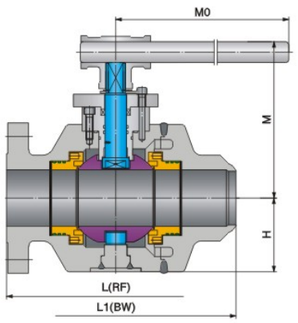

Lever–Operated

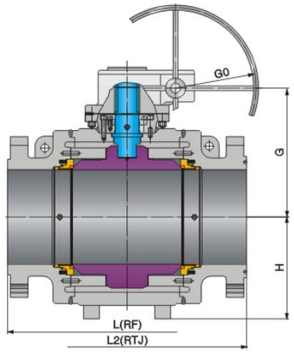

Worm Gear Operated

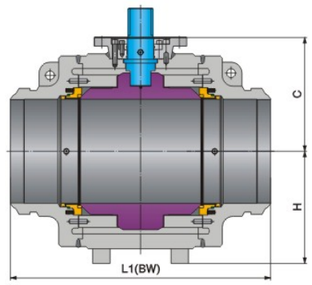

Bare Stem with Mounting Pad

Main External Dimensions

PN63/PN64/Class400

Full Bore **Unit: mm**

DN	NPS	L (RF)	L1 (BW)	L2 (RTJ)	MA		GA		C	H	WT(Kg)	Torque (N·M)
					M	M0	B	B0				
50	2	292	292	295	136	500	--	--	105	100	25	124
65	2 1/2	330	330	333	164	650	--	--	135	115	35	155
80	3	356	356	359	191	650	220	300	165	130	56	265
100	4	406	406	410	244	800	254	400	210	162	90	467
150	6	495	495	498	--	--	350	400	243	203	249	650
200	8	597	597	600	--	--	385	400	285	257	458	1806
250	10	673	673	676	--	--	440	500	323	310	676	2638
300	12	762	762	765	--	--	490	500	370	350	939	2929
350	14	826	826	829	--	--	510	500	385	360	1166	3971
400	16	902	902	905	--	--	545	500	428	413	1397	6307
450	18	978	978	981	--	--	630	600	465	430	1960	9165
500	20	1054	1054	1060	--	--	670	600	500	490	2649	12155
550	22	1143	1143	1153	--	--	720	600	540	510	3286	15175
600	24	1232	1232	1241	--	--	772	600	590	570	3936	21550
650	26	1308	1308	1321	--	--	805	700	630	620	4990	25426
700	28	1397	1397	1410	--	--	832	700	660	690	5718	31336
750	30	1524	1524	1537	--	--	860	800	705	750	6850	34550
800	32	1651	1651	1667	--	--	910	800	748	780	7766	36937
850	34	1778	1778	1794	--	--	946	800	775	815	9507	39447
900	36	1880	1880	1895	--	--	980	800	810	840	11077	43962
1000	40	2250	2250	--	--	--	1205	800	910	940	14138	48894
1050	42	--	--	--	--	--	1285	800	965	980	16679	50300
1200	48	--	--	--	--	--	1435	1000	1100	1120	23179	80302

Tube Shape Body Full Welded Trunnion Ball Valve

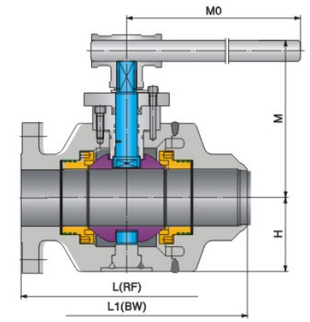

Lever–Operated

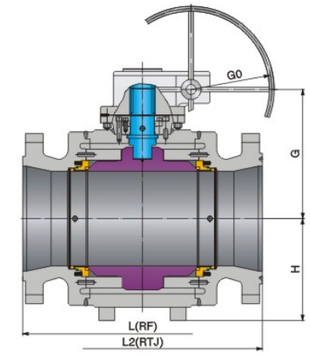

Worm Gear Operated

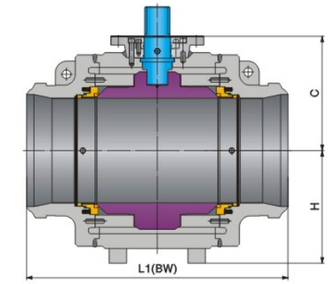

Bare Stem with Mounting Pad

Main External Dimensions

PN63/PN64/Class400

Reduced Bore **Unit: mm**

DN×DN'	NPS×NPS'	L (RF)	L1 (BW)	L2 (RTJ)	MA		GA		C	H	WT(Kg)	Torque (N·M)
					M	M0	B	B0				
80×50	3×2	356	356	359	136	500	--	--	105	100	36	124
100×80	4×3	406	406	410	191	650	220	300	165	130	47	265
150×100	6×4	495	495	498	244	800	254	400	210	162	127	467
200×150	8×6	597	597	600	--	--	350	400	243	203	280	650
250×200	10×8	673	673	676	--	--	385	400	285	257	508	1806
300×250	12×10	762	762	765	--	--	440	500	323	310	746	2638
350×250	14×10	826	826	829	--	--	440	500	323	310	845	2638
350×300	14×12	826	826	829	--	--	490	500	370	350	1060	2929
400×300	16×12	902	902	905	--	--	490	500	370	350	1230	2929
400×350	16×14	902	902	905	--	--	510	500	385	360	1330	3971
450×350	18×14	978	978	981	--	--	510	500	385	360	1480	3971
450×400	18×16	978	978	981	--	--	545	500	428	413	1592	6307
500×400	20×16	1054	1054	1060	--	--	545	500	428	413	1887	6307
500×450	20×18	1054	1054	1060	--	--	630	600	465	430	2197	9165
600×500	24×20	1232	1232	1241	--	--	670	600	500	490	3160	12155
750×600	30×24	1524	1524	1537	--	--	772	600	590	570	5580	21550
900×750	36×30	1880	1880	1895	--	--	860	800	705	750	9520	34550

Tube Shape Body Full Welded Trunnion Ball Valve

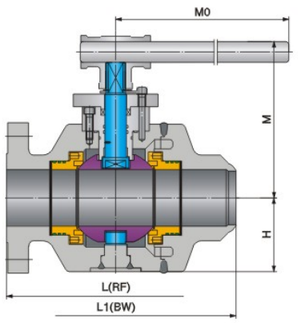

Lever–Operated

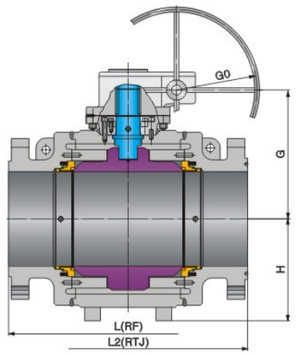

Worm Gear Operated

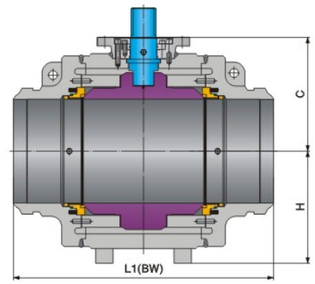

Bare Stem with Mounting Pad

Main External Dimensions

PN100/PN110/Class600

Full Bore **Unit: mm**

DN	NPS	L (RF)	L1 (BW)	L2 (RTJ)	MA		GA		C	H	WT(Kg)	Torque (N·M)
					M	M0	B	B0				
50	2	292	292	295	136	500	--	--	105	100	33	168
65	2 1/2	330	330	333	164	650	--	--	135	115	43	210
80	3	356	356	359	191	650	220	300	165	130	64	360
100	4	432	432	435	244	800	254	400	210	162	124	572
150	6	559	559	562	--	--	360	400	253	203	255	912
200	8	660	660	664	--	--	390	400	290	257	487	2177
250	10	787	787	791	--	--	450	500	333	310	760	3093
300	12	838	838	841	--	--	500	500	380	350	984	4282
350	14	889	889	892	--	--	520	500	395	360	1266	7458
400	16	991	991	994	--	--	550	500	433	413	1532	9310
450	18	1092	1092	1095	--	--	635	600	470	430	2097	14693
500	20	1194	1194	1200	--	--	675	600	505	490	2640	20011
550	22	1295	1295	1305	--	--	728	600	545	510	3790	24785
600	24	1397	1397	1407	--	--	780	600	595	570	4740	31226
650	26	1448	1448	1461	--	--	810	700	635	620	5650	35184
700	28	1549	1549	1562	--	--	840	700	665	690	6760	38987
750	30	1651	1651	1664	--	--	870	800	710	750	8380	41832
800	32	1778	1778	1794	--	--	915	800	755	780	9740	63865
850	34	1930	1930	1946	--	--	951	800	780	815	11340	71720
900	36	2083	2083	2099	--	--	987	1000	815	840	13300	89020
1000	40	2337	2337	2366	--	--	1212	1000	915	940	18340	109900
1050	42	2439	2439	2467	--	--	1292	1000	970	980	21550	121165
1200	48	2540	2540	2540	--	--	1440	1000	1105	1120	31500	145345
1400	56	2949	2949	2949	--	--	1600	1000	1300	1290	48050	169230

Tube Shape Body Full Welded Trunnion Ball Valve

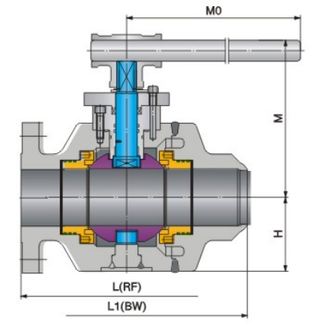

Lever–Operated

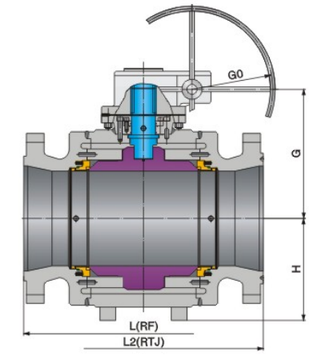

Worm Gear Operated

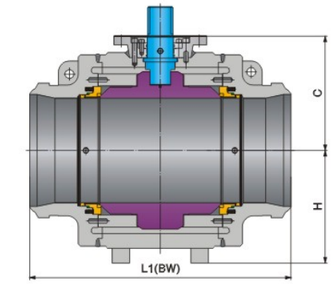

Bare Stem with Mounting Pad

Main External Dimensions

PN100/PN110/Class600

Reduced Bore **Unit: mm**

DN×DN'	NPS×NPS'	L (RF)	L1 (BW)	L2 (RTJ)	MA		GA		C	H	WT(Kg)	Torque (N·M)
					M	M0	B	B0				
80×50	3×2	356	356	359	136	500	--	--	105	100	40	168
100×80	4×3	432	432	435	191	650	220	300	165	130	80	360
150×100	6×4	559	559	562	244	800	254	400	210	162	153	572
200×150	8×6	660	660	664	--	--	360	400	253	203	290	912
250×200	10×8	787	787	791	--	--	390	400	290	257	547	2177
300×250	12×10	838	838	841	--	--	450	500	333	310	810	3093
350×250	14×10	889	889	892	--	--	450	500	333	310	915	3093
350×300	14×12	889	889	892	--	--	500	500	380	350	1140	4282
400×300	16×12	991	991	994	--	--	500	500	380	350	1350	4282
400×350	16×14	991	991	994	--	--	520	500	395	360	1450	7458
450×350	18×14	1092	1092	1095	--	--	520	500	395	360	1530	7458
450×400	18×16	1092	1092	1095	--	--	550	500	433	413	1682	9310
500×400	20×16	1194	1194	1200	--	--	550	500	433	413	2087	9310
500×450	20×18	1194	1194	1200	--	--	635	600	470	430	2377	14693
600×500	24×20	1397	1397	1407	--	--	675	600	505	490	3250	20011
750×600	30×24	1651	1651	1664	--	--	780	600	595	570	6200	31226
900×750	36×30	2083	2083	2099	--	--	870	800	710	750	10500	41832

Tube Shape Body Full Welded Trunnion Ball Valve

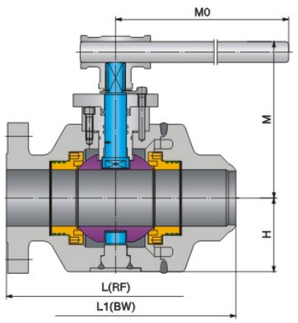

Lever–Operated

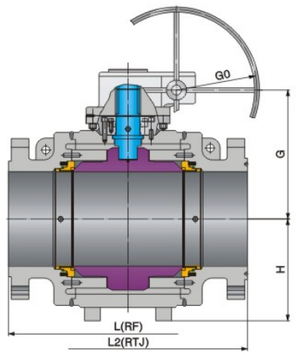

Worm Gear Operated

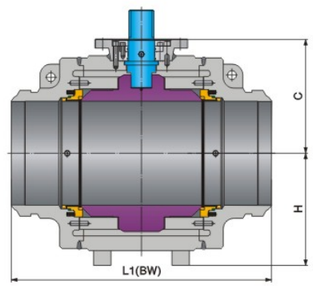

Bare Stem with Mounting Pad

Main External Dimensions

PN150/PN160/Class900

Full Bore **Unit: mm**

DN	NPS	L (RF)	L1 (BW)	L2 (RTJ)	MA		GA		C	H	WT(Kg)	Torque (N·M)
					M	M0	B	B0				
50	2	368	368	371	148	650	--	--	105	110	50	228
65	2 1/2	419	419	422	191	800	--	--	135	118	61	263
80	3	381	381	384	216	800	255	400	165	130	76	512
100	4	457	457	460	--	--	285	400	210	167	150	946
150	6	610	610	613	--	--	370	400	260	251	367	1784
200	8	737	737	740	--	--	400	500	295	280	600	4116
250	10	838	838	841	--	--	450	500	345	340	1027	5910
300	12	965	965	968	--	--	500	500	384	390	1558	10137
350	14	1029	1029	1038	--	--	520	500	400	442	1765	14141
400	16	1130	1130	1140			550	600	440	490	2157	18866
450	18	1219	1219	1232	--	--	600	600	482	500	2860	22400
500	20	1321	1321	1334	--	--	630	600	530	500	4220	28544
550	22	--	--	--	--	--	--	--	--	--	--	--
600	24	1549	1549	1568	--	--	810	700	615	630	7150	43276
650	26	1651	1651	1673	--	--	850	700	650	650	8040	48580
700	28	1753	1753	1775	--	--	900	800	670	710	10840	60000
750	30	1880	1880	1902	--	--	980	1000	725	780	12210	76000
800	32	2032	2032	2054	--	--	1240	1000	785	810	14992	90195
850	34	2159	2159	2188	--	--	1275	1000	805	850	17230	100460
900	36	2286	2286	2315	--	--	1310	1000	845	900	19920	131875
1000	40	2283	2100	2311	--	--	1420	1000	955	980	24251	--
1050	42	2438	2200	2461	--	--	1455	1000	986	990	28660	--
1200	48	2769	2300	2797	--	--	1530	1000	1150	1199	36156	--

Tube Shape Body Full Welded Trunnion Ball Valve

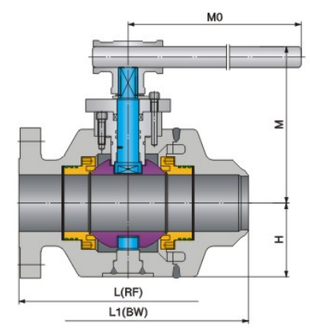

Lever–Operated

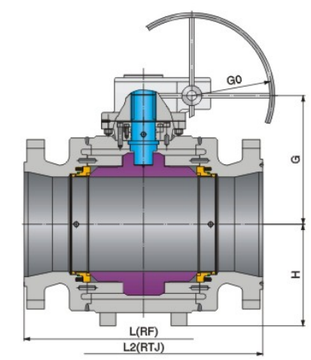

Worm Gear Operated

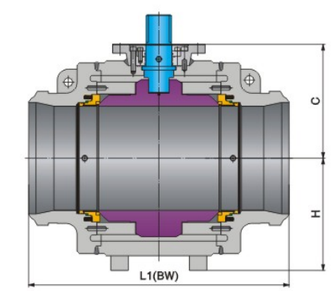

Bare Stem with Mounting Pad

Main External Dimensions

PN150/PN160/Class900

Reduced Bore **Unit: mm**

DN×DN'	NPS×NPS'	L (RF)	L1 (BW)	L2 (RTJ)	MA		GA		C	H	WT(Kg)	Torque (N·M)
					M	M0	B	B0				
80×50	3×2	381	381	384	148	650	--	--	105	110	59	228
100×80	4×3	457	457	460	216	650	255	400	165	130	97	512
150×100	6×4	610	610	613	--	--	285	400	210	167	249	946
200×150	8×6	737	737	740	--	--	370	400	260	251	447	1784
250×200	10×8	838	838	841	--	--	400	500	295	280	700	4116
300×250	12×10	965	965	968	--	--	450	500	345	340	1148	5910
350×250	14×10	1029	1029	1038	--	--	450	500	345	340	1235	5910
350×300	14×12	1029	1029	1038	--	--	500	500	384	390	1643	10137
400×300	16×12	1130	1130	1140	--	--	500	500	384	390	1738	10137
400×350	16×14	1130	1130	1140	--	--	520	500	400	442	1829	14141
450×350	18×14	1219	1219	1232	--	--	520	500	400	442	1920	14141
450×400	18×16	1219	1219	1232	--	--	550	600	440	490	2437	18866
500×400	20×16	1321	1321	1334	--	--	550	600	440	490	2887	18866
500×450	20×18	1321	1321	1334	--	--	600	600	482	500	3260	22400
600×500	24×20	1549	1549	1568	--	--	630	600	530	500	5400	28544
750×600	30×24	1880	1880	1902	--	--	810	700	615	630	8750	43276
900×750	36×30	2286	2286	2315	--	--	980	1000	725	780	15420	76000

Tube Shape Body Full Welded Trunnion Ball Valve

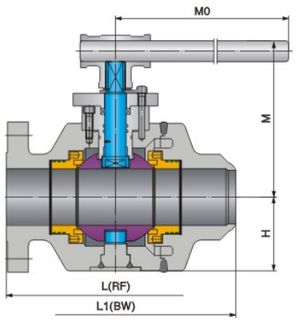

Lever–Operated

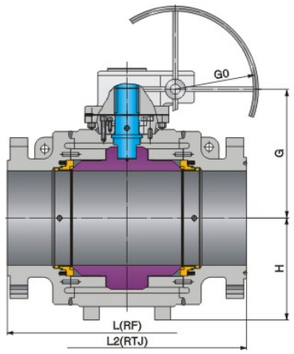

Worm Gear Operated

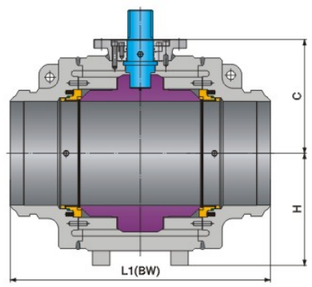

Bare Stem with Mounting Pad

Main External Dimensions

PN250/PN260/Class1500

Full Bore — **Unit: mm**

DN	NPS	L (RF)	L1 (BW)	L2 (RTJ)	MA		GA		C	H	WT(Kg)	Torque (N·M)
					M	M0	B	B0				
50	2	368	368	371	175	650	--	--	105	105	53	390
65	2 1/2	419	419	422	191	650	--	--	138	120	63	448
80	3	470	470	473	216	750	255	500	165	130	98	931
100	4	546	546	549	--	--	285	500	215	167	200	1524
150	6	705	705	711	--	--	460	500	260	270	485	2934
200	8	832	832	841	--	--	520	500	300	300	827	7215
250	10	991	991	1000	--	--	640	500	365	360	1507	10990
300	12	1130	1130	1146	--	--	720	500	420	423	2272	16103
350	14	1257	1257	1276	--	--	760	500	440	460	2880	24518
400	16	1384	1384	1407	--	--	820	600	480	510	4120	29630
450	18	1537	1537	1559	--	--	880	600	550	600	6260	34392
500	20	1664	1664	1686	--	--	900	700	620	650	9120	40918
550	22	--	--	--	--	--	--	--	--	--	--	--
600	24	--	--	1972	--	--	920	800	700	720	14320	65351

Tube Shape Body Full Welded Trunnion Ball Valve

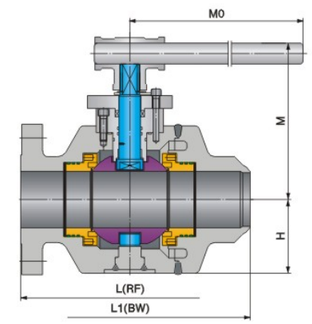

Lever–Operated

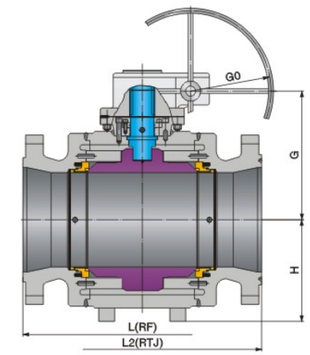

Worm Gear Operated

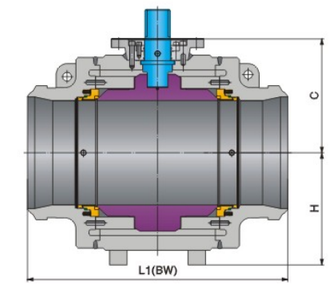

Bare Stem with Mounting Pad

Main External Dimensions

PN250/PN260/Class1500

Reduced Bore — **Unit: mm**

DN×DN'	NPS×NPS'	L (RF)	L1 (BW)	L2 (RTJ)	MA		GA		C	H	WT(Kg)	Torque (N·M)
					M	M0	B	B0				
80×50	3×2	470	470	473	175	650	--	--	105	105	66	390
100×80	4×3	546	546	549	216	750	255	500	165	130	126	931
150×100	6×4	705	705	711	--	--	285	500	215	167	290	1524
200×150	8×6	832	832	841	--	--	460	500	260	270	575	2934
250×200	10×8	991	991	1000	--	--	520	500	300	300	1032	7215
300×250	12×10	1130	1130	1146	--	--	640	500	365	360	1767	10990
350×250	14×10	1257	1257	1276	--	--	640	500	365	360	2152	10990
350×300	14×12	1257	1257	1276	--	--	720	500	420	423	2537	16103
400×300	16×12	1384	1384	1407	--	--	720	500	420	423	2807	16103
400×350	16×14	1384	1384	1407	--	--	760	500	440	460	3280	24518
450×350	18×14	1537	1537	1559	--	--	760	500	440	460	4050	24518
450×400	18×16	1537	1537	1559	--	--	820	600	480	510	4980	29630
500×400	20×16	1664	1664	1686	--	--	820	600	480	510	5350	29630
500×450	20×18	1664	1664	1686	--	--	880	600	550	600	7540	34392
600×500	24×20	--	--	1972	--	--	900	700	620	650	11050	40918

Tube Shape Body Full Welded Trunnion Ball Valve

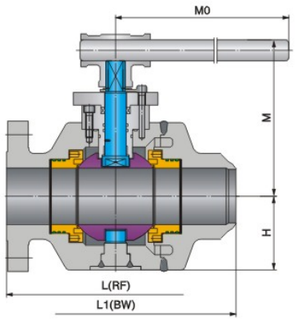

Lever–Operated

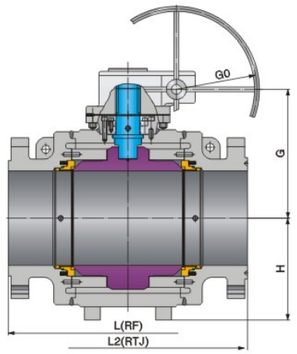

Worm Gear Operated

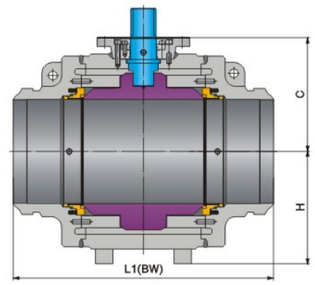

Bare Stem with Mounting Pad

Main External Dimensions

PN420/Class2500

Full Bore — Unit: mm

DN	NPS	L (RF)	L1 (BW)	L2 (RTJ)	MA		GA		C	H	WT(Kg)	Torque (N·M)
					M	M0	B	B0				
50	2	451	451	454	168	800	170	350	120	125	90	589
65	$2^1/_2$	508	508	514	190	1000	210	450	140	160	152	736
80	3	578	578	584	205	1000	250	500	175	200	200	1577
100	4	673	673	683	--	--	290	500	225	230	385	1965
150	6	914	914	927	--	--	340	600	260	250	778	5501
200	8	1022	1022	1038	--	--	470	600	380	340	1352	11786
250	10	1270	1270	1292	--	--	490	700	450	425	2137	13222
300	12	1422	1422	1445	--	--	615	800	515	480	3267	20075

Reduced Bore — Unit: mm

DN×DN'	NPS×NPS'	L (RF)	L1 (BW)	L2 (RTJ)	MA		GA		C	H	WT(Kg)	Torque (N·M)
					M	M0	B	B0				
50×40	$2\times1^1/_2$	451	451	454	155	800	--	--	115	105	63	320
80×50	3×2	578	578	584	168	800	170	350	120	125	158	589
100×80	4×3	673	673	683	205	1000	250	500	175	200	270	1577
150×100	6×4	914	914	927	--	--	290	500	225	230	517	1965
200×150	8×6	1022	1022	1038	--	--	340	600	260	250	1098	5501
250×200	10×8	1270	1270	1292	--	--	470	600	380	340	1667	11786
300×250	12×10	1422	1422	1445	--	--	490	700	450	425	2567	13222

Floating Ball Valve

Structure Features

Use

It's mainly used for oil and natural gas storage and transportation, the chemical industry, metallurgy, paper making, food, shipbuilding and other industries to do the opening and closing control of media devices, coupled with pneumatic or electrical device can also be achieved remotely, bail operator safety.

Feature

Locking, and limit device to prevent misuse of the valve, the valve can be equipped with a lock limit institutions, especially in the field or for the installation process does not allow to open or close the valve, causing security to prevent misuse of others accident, the valve lock is necessary;

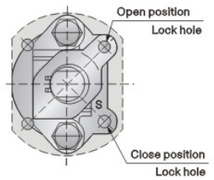

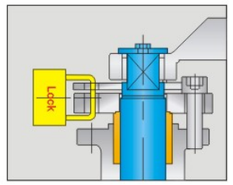

Anti–blow out stem design, stem the use of downloading structure, preventing the abnormal increase as intraluminal pressure forced Blow Out the accident; PTFE thrust washers to ensure smooth between the stem and valve operation;

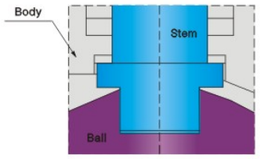

Anti–static design, to ensure that working conditions in the explosive on the safe use;

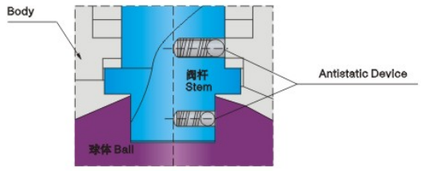

Fire design, when a fire occurs, when the non–metallic materials of the valve seat and seal damaged at high temperatures, a specially designed metal to metal secondary seal structure, effectively prevent the media a lot of leakage;

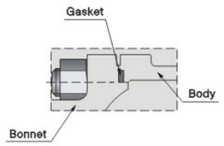

Before fire

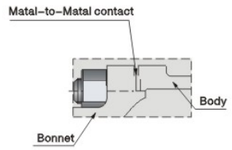

After fire

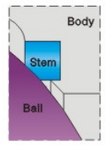

Before fire

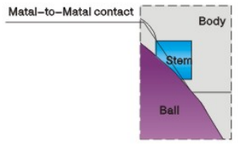

After fire

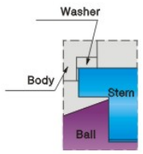

Before fire

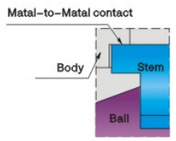

After fire

Body cavity pressure relief design to ensure reliable sealing valve, and extending its life;

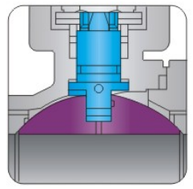

Standard ISO–5211 disk access design to facilitate customer replacement operation at any time.

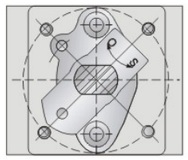

Connection with the implementation of ISO 5211 standard plate

Cast Steel
Floating Ball Valve

Technical Specifications

Design Basis		GB	API		ASME
Design Standard		GB/T 12237	API 608	API 6D	ASME B16.34
Face-to-Face		GB/T 12221	ASME B16.10	API 6D	ASME B16.10
Connection End	Flanged	GB/T 9113	ASME B16.5		
	Butt-Welding	GB/T 12224	ASME B16.25		
Material		NACE MR0175			
Test and Inspection		JB/T 9092	API 598	API 6D	ASME B16.34
Fire Test		JB/T 6899	API 6FA/API607		

The dimension of welded end connection can be designed and manufactured according to the buyers's request.

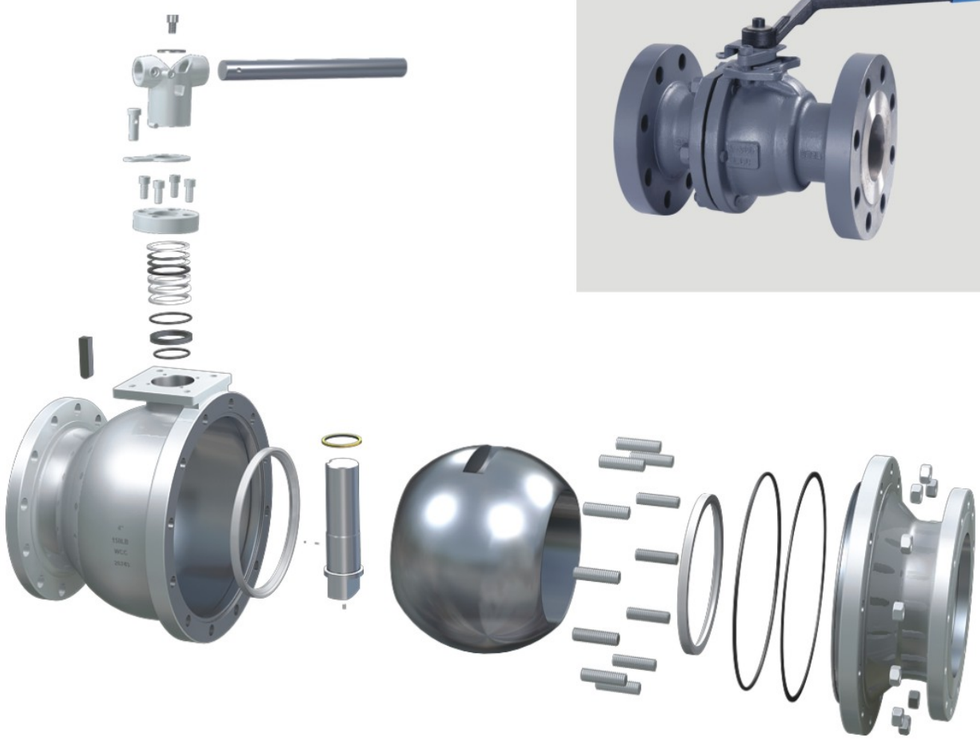

Cast Steel
Floating Ball Valve

Main Parts and Materials

Conventional Type

Part Name	Carbon Steel		Low Temp. Steel		Stainless Steel	
	GB	ASTM	GB	ASTM	GB	ASTM
Body	WCB	A216-WCB	LCB LCC	A352-LCB A352-LCC	CF8 CF8M	A351-CF8 A351-CF8M
Bolt/Nut	35CrMo 45	A193-B7 A194-2H	304 304	A320-L7 A194-4	304 304	A193-B8 A194-8
Ball	25+ENP	A105+ENP	0Cr18Ni9	A350-LF2+ENP	0Cr18Ni9 00Cr17Ni12Mo2	A182-F304 A182-F316
Stem	1Cr13 2Cr13	A276-410 A276-420	304	A350-LF2 A276-304	304 316	A276-304 A276-316
Seat	Standard: PTFE OR NYLON Special: PEEK OR DEVLON		Standard: PTFE OR NYLON Special: PEEK OR DEVLON		Standard: PTFE OR NYLON Special: PEEK OR DEVLON	
O-Ring	NBR OR VITON		NBR OR VITON		VITON	
Gasket	Graphite+ Stainless steel		Graphite+ Stainless steel		Graphite+ Stainless steel	

Main Parts and Materials

Sulfur-resisting type

Part Name	Carbon Steel		Low Temp. Steel		Stainless Steel	
	GB	ASTM	GB	ASTM	GB	ASTM
Body	WCB	A216-WCB	LCB LCC	A352-LCB A352-LCC	CF8 CF8M	A351-CF8 A351-CF8M
Bolt/Nut	35CrMo 45	A193-B7 A194-2H	304 304	A320-L7 A194-4	304 304	A193-B8 A194-8
Ball	25+ENP	A105+ENP	0Cr18Ni9	A350-LF2+ENP	0Cr18Ni9 00Cr17Ni12Mo2	A182-F304 A182-F316
Stem	17-4PH		For use at low temperatures resilient steels.		304 316	A276-304 A276-316
Seat	Standard: PTFE OR NYLON Special: PEEK OR DEVLON		Standard: PTFE OR NYLON Special: PEEK OR DEVLON		Standard: PTFE OR NYLON Special: PEEK OR DEVLON	
O-Ring	NBR OR VITON		NBR OR VITON		VITON	
Gasket	Graphite+ Stainless steel		Graphite+ Stainless steel		Graphite+ Stainless steel	

Cast Steel
Floating Ball Valve

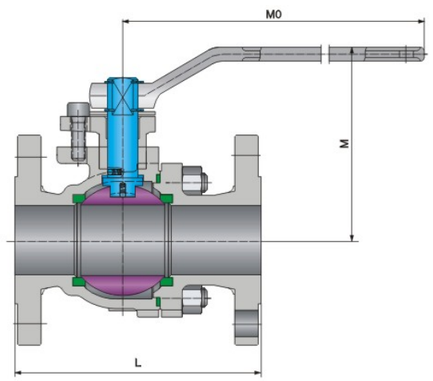

Lever–Operated

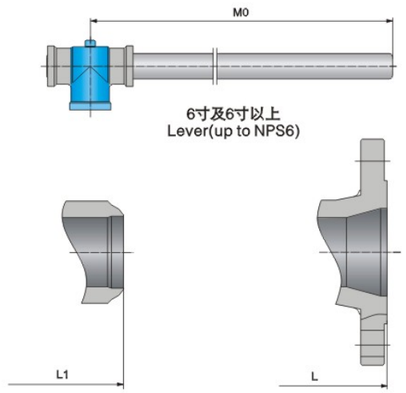

Welding end BW

Reduced runoff Road RB

Main External Dimensions

PN16/PN20/Class150

Full Bore Unit: mm

DN	NPS	L (RF)	L1 (BW)	MA		WT(Kg)
				M	M0	
15	1/2	108	140	85	140	3
20	3/4	117	152	90	140	4
25	1	127	165	99	150	5
40	$1^1/_2$	165	190	126	200	8
50	2	178	216	140	250	12
65	$2^1/_2$	191	241	165	300	18
80	3	203	283	178	350	24
100	4	229	305	230	500	38
150	6	394	457	310	800	82
200	8	457	521	350	1000	145
250	10	533	559	400	1000	235

Reduced Bore Unit: mm

DN×DN'	NPS×NPS'	L (RF)	L1 (BW)	MA		WT(Kg)
				M	M0	
20×15	3/4×1/2	117	152	85	140	3.5
25×20	1×3/4	127	165	90	140	5
40×25	$1^1/_2$×1	165	190	99	150	6
50×40	2×$1^1/_2$	178	216	126	200	9.7
80×50	3×2	203	283	140	250	18
100×80	4×3	229	305	178	350	32
150×100	6×4	394	457	230	500	60
200×150	8×6	457	521	310	800	120
250×200	10×8	533	559	350	1000	200

PN25/PN40/Class300

Full Bore Unit: mm

DN	NPS	L (RF)	L1 (BW)	MA		WT(Kg)
				M	M0	
15	1/2	140	140	85	140	3
20	3/4	152	152	90	140	5
25	1	165	165	99	150	6
40	$1^1/_2$	190	190	126	200	11
50	2	216	216	140	250	16
65	$2^1/_2$	241	241	165	300	24
80	3	283	283	178	350	34
100	4	305	305	230	500	56
150	6	457	457	310	800	125
200	8	502	521	350	1000	222

Reduced Bore Unit: mm

DN×DN'	NPS×NPS'	L (RF)	L1 (BW)	MA		WT(Kg)
				M	M0	
20×15	3/4×1/2	152	152	85	140	3.8
25×20	1×3/4	165	165	90	140	5.6
40×25	$1^1/_2$×1	190	190	99	150	10.2
50×40	2×$1^1/_2$	216	216	126	200	15
80×50	3×2	283	283	140	250	31.5
100×80	4×3	305	305	178	350	57
150×100	6×4	457	457	230	500	83
200×150	8×6	502	521	310	800	191

Cast Steel
Floating Ball Valve

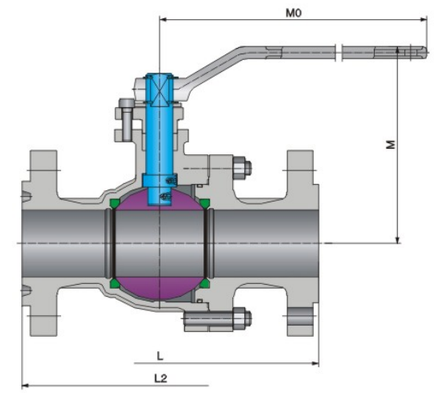

Lever–Operated

Catenin end RTJ

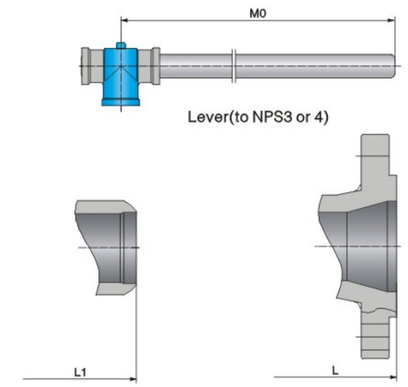

Welding end BW

Reduced runoff Road RB

Main External Dimensions

PN100/PN110/Class600

Full Bore Unit: mm

DN	NPS	L (RF)	L1 (BW)	L2 (RTJ)	MA		WT(Kg)
					M	M0	
15	1/2	165	165	163.5	79	140	5
20	3/4	191	191	191	83	140	7
25	1	216	216	216	114	200	9
40	$1^1/_2$	241	241	241	125	250	17
50	2	292	292	295	156	300	25
65	$2^1/_2$	330	330	333	172	350	42
80	3	356	356	359	220	500	56
100	4	432	432	435	250	650	85

Reduced Bore Unit: mm

DN×DN'	NPS×NPS'	L (RF)	L1 (BW)	L2 (RTJ)	MA		WT(Kg)
					M	M0	
20×15	3/4×1/2	191	191	191	79	140	4
25×20	1×3/4	216	216	216	83	140	6.2
40×25	$1^1/_2$×1	241	241	241	114	200	12.5
50×40	2×$1^1/_2$	292	292	295	125	250	18.2
80×50	3×2	356	356	359	156	300	35
100×80	4×3	432	432	435	220	500	65
150×100	6×4	559	559	562	250	650	106

Forged Steel Floating Ball Valve

Technical Specifications

Design Basis		GB	API		ASME
Design Standard		GB/T 12237	API 608	API 6D	ASME B16.34
Face–to–Face		GB/T 12221	ASME B16.10	API 6D	ASME B16.10
Connection End	Flanged	GB/T 9113	ASME B16.5		
	Butt–Welding	GB/T 12224	ASME B16.25		
Material		NACE MR0175			
Test and Inspection		JB/T 9092	API 598	API 6D	ASME B16.34
Fire Test		JB/T 6899	API 6FA/API607		

The dimension of welded end connection can be designed and manufactured according to the buyers's request.

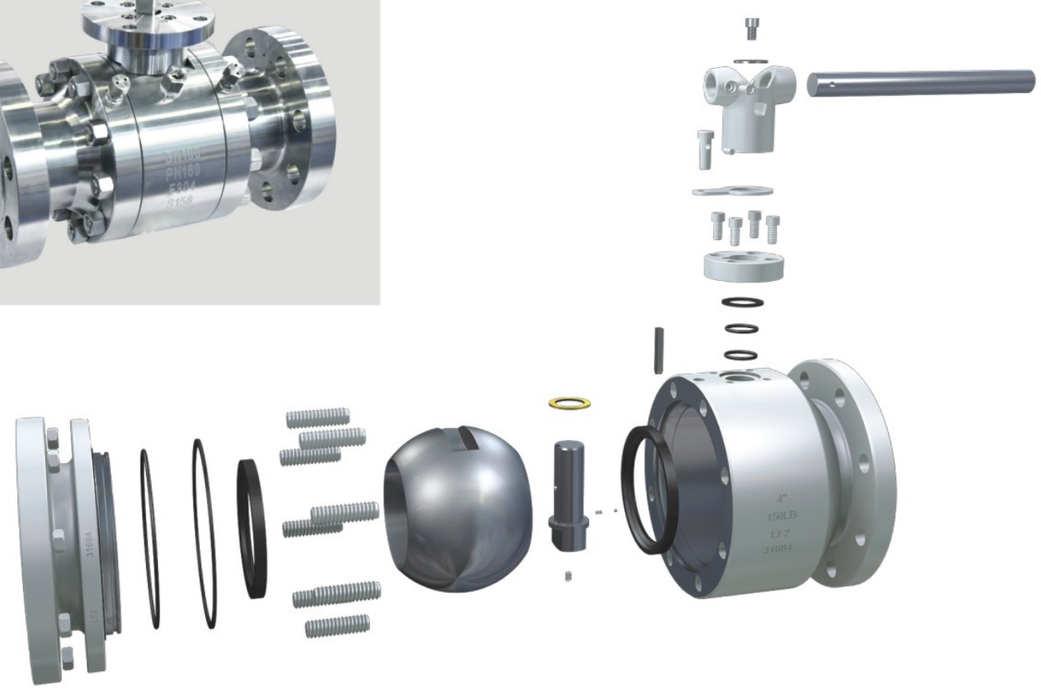

Forged Steel Floating Ball Valve

Main Parts and Materials

Conventional Type

Part Name	Carbon Steel		Low Temp. Steel		Stainless Steel	
	GB	ASTM	GB	ASTM	GB	ASTM
Body	25	A105	304	A350–LF2	0Cr18Ni9 00Cr17Ni12Mo2	A182–F304 A182–F316
Bolt/Nut	35CrMo 45	A193–B7 A194–2H	304 304	A320–L7 A194–4	304 304	A193–B8 A194–8
Ball	25+ENP	A105+ENP	0Cr18Ni9	A350–LF2+ENP	0Cr18Ni9 00Cr17Ni12Mo2	A182–F304 A182–F316
Stem	1Cr13 2Cr13	A276–410 A276–420	304	A350–LF2 A276–304	304 316	A276–304 A276–316
Seat	Standard: PTFE OR NYLON Special: PEEK OR DEVLON		Standard: PTFE OR NYLON Special: PEEK OR DEVLON		Standard: PTFE OR NYLON Special: PEEK OR DEVLON	
O–Ring	NBR OR VITON		NBR OR VITON		VITON	
Gasket	Graphite+ Stainless steel		Graphite+ Stainless steel		Graphite+ Stainless steel	

Main Parts and Materials

Sulfur-resisting type

Part Name	Carbon Steel		Low Temp. Steel		Stainless Steel	
	GB	ASTM	GB	ASTM	GB	ASTM
Body	25	A105	304	A352–LCB A352–LCC	0Cr18Ni9 00Cr17Ni12Mo2	A351–CF8M A351–CF3M
Bolt/Nut	35CrMo 45	A193–B7 A194–2H	304 304	A320–L7 A194–4	304 304	A193–B8 A194–8
Ball	25+ENP	A105+ENP	0Cr18Ni9	A350–LF2+ENP	0Cr18Ni9 00Cr17Ni12Mo2	A182–F304 A182–F316
Stem	17–4PH		For use at low temperatures resilient steels.		304 316	A276–304 A276–316
Seat	Standard: PTFE OR NYLON Special: PEEK OR DEVLON		Standard: PTFE OR NYLON Special: PEEK OR DEVLON		Standard: PTFE OR NYLON Special: PEEK OR DEVLON	
O–Ring	NBR OR VITON		NBR OR VITON		VITON	
Gasket	Graphite+ Stainless steel		Graphite+ Stainless steel		Graphite+ Stainless steel	

Forged Steel Floating Ball Valve

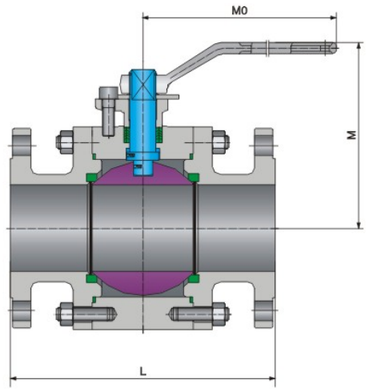

Hand-operated Floating Ball Valve MA

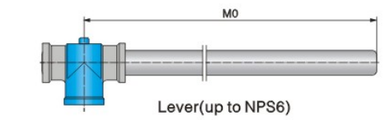

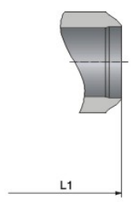

Welding end BW

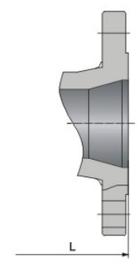

Reduced runoff Road RB

Main External Dimensions

PN16/PN20/Class150

Full Bore Unit: mm

DN	NPS	L (RF)	L1 (BW)	MA		WT(Kg)
				M	M0	
15	1/2	108	140	82	140	3
20	3/4	117	152	87	140	4
25	1	127	165	92	150	6
40	$1^1/_2$	165	190	108	200	12
50	2	178	216	119	250	15
65	$2^1/_2$	191	241	150	300	19
80	3	203	283	175	350	22
100	4	229	305	220	500	46
150	6	394	457	280	800	110
200	8	457	521	320	1000	175
250	10	533	559	380	1000	*

Reduced Bore Unit: mm

DN×DN'	NPS×NPS'	L (RF)	L1 (BW)	MA		WT(Kg)
				M	M0	
20×15	3/4×1/2	117	152	82	140	3.5
25×20	1×3/4	127	165	87	140	5
40×25	$1^1/_2$×1	165	190	92	150	11
50×40	2×$1^1/_2$	178	216	108	200	13
80×50	3×2	203	283	119	250	20
100×80	4×3	229	305	175	350	42
150×100	6×4	394	457	220	500	80
200×150	8×6	457	521	280	800	120
250×200	10×8	533	559	320	1000	190

PN25/PN40/Class300

Full Bore Unit: mm

DN	NPS	L (RF)	L1 (BW)	MA		KG
				M	M0	
15	1/2	140	140	82	140	4
20	3/4	152	152	87	140	6
25	1	165	165	92	150	10
40	$1^1/_2$	190	190	108	200	18
50	2	216	216	119	250	22
65	$2^1/_2$	241	241	150	300	28
80	3	283	283	175	350	38
100	4	305	305	220	500	78
150	6	457	457	280	800	148
200	8	502	521	320	1000	196

Reduced Bore Unit: mm

DN×DN'	NPS×NPS'	L (RF)	L1 (BW)	MA		WT(Kg)
				M	M0	
20×15	3/4×1/2	152	152	82	140	5
25×20	1×3/4	165	165	87	140	7
40×25	$1^1/_2$×1	190	190	92	150	16
50×40	2×$1^1/_2$	216	216	108	200	19
80×50	3×2	283	283	119	250	30
100×80	4×3	305	305	175	350	52
150×100	6×4	457	457	220	500	100
200×150	8×6	502	521	280	800	180

Forged Steel Floating Ball Valve

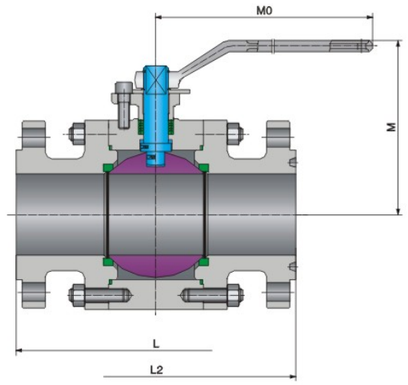

Hand-operated Floating Ball Valve MA

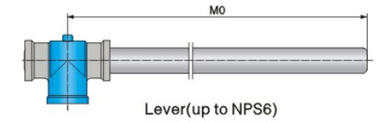

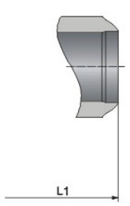

Welding end BW

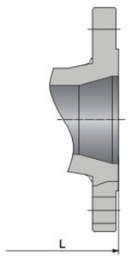

Reduced runoff Road RB

Main External Dimensions

PN100/PN110/Class 600

Full Bore Unit: mm

DN	NPS	L (RF)	L1 (BW)	L2 (RTJ)	MA		WT(Kg)
					M	M0	
15	1/2	165	165	163.5	82	140	5
20	3/4	191	191	191	87	140	7
25	1	216	216	216	98	200	10
40	$1^1/_2$	241	241	241	118	250	15
50	2	292	292	295	130	300	22
65	$2^1/_2$	330	330	333	158	350	28
80	3	356	356	359	180	500	38
100	4	432	432	435	220	650	78

Reduced Bore Unit: mm

DN×DN'	NPS×NPS'	L (RF)	L1 (BW)	L2 (RTJ)	MA		WT(Kg)
					M	M0	
20×15	3/4×1/2	191	191	191	82	140	7
25×20	1×3/4	216	216	216	87	140	9
40×25	$1^1/_2$×1	241	241	241	98	200	17
50×40	2×$1^1/_2$	292	292	295	118	250	20
80×50	3×2	356	356	359	130	300	33
100×80	4×3	432	432	435	180	500	75
150×100	6×4	559	559	562	220	650	150

PN150/PN160/Class900 PN250/PN260/Class1500

Full Bore Unit: mm

DN	NPS	L (RF)	L1 (BW)	L2 (RTJ)	MA		WT(Kg)
					M	M0	
15	1/2	216	216	216	85	140	10
20	3/4	229	229	229	90	140	14
25	1	254	254	254	98	200	17
40	$1^1/_2$	305	305	305	118	250	23
50	2	368	368	371	130	300	34
65	$2^1/_2$	419	419	422	160	350	40

Reduced Bore Unit: mm

DN×DN'	NPS×NPS'	L (RF)	L1 (BW)	L2 (RTJ)	手柄 MA		WT(Kg)
					M	M0	
20×15	3/4×1/2	229	229	229	85	140	11
25×20	1×3/4	254	254	254	90	140	15
40×25	$1^1/_2$×1	305	305	305	98	200	25
50×40	2×$1^1/_2$	368	368	371	118	250	30

PN420/Class2500

Full Bore Unit: mm

DN	NPS	L (RF)	L1 (BW)	L2 (RTJ)	MA		WT(Kg)
					M	M0	
15	1/2	264	264	264	81	200	12
20	3/4	273	273	273	84	200	16
25	1	308	308	308	107	300	20

Construction and Features of Trunnion Ball Valve

Urgent Grease Injection Device

According to customers' requirement, the trunnion ball valves made by company are provided with devices for urgentgrease injection, which are on both the stem and seat for the trunnion ball valves of DN>150mm (NPS6), and in the body cavity for the valve of DN<125mm. When the O–ring of stem or the body seat ring is damaged due to accident, the medium leakage between body and stem can be prevented by injecting the sealing grease through the device.

Blow-out Proof Stem

Blow–out proof structure is provited with for the stem, which is positioned by the up–end cap and screw, being guaranteed not to be blown–out by the medium even if at abnormal risen pressure in the cavity.

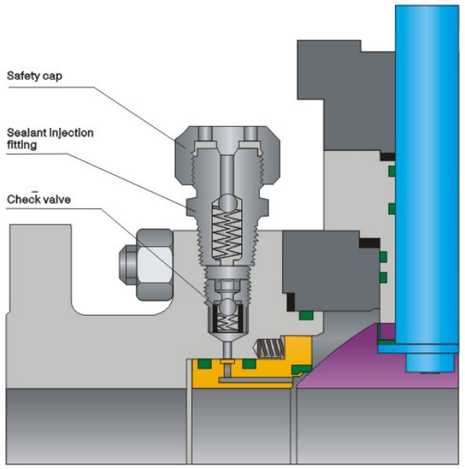

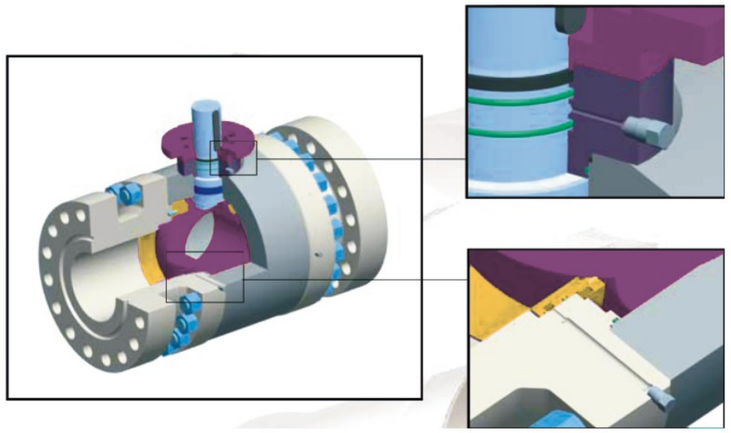

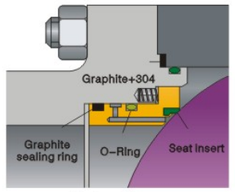

Before Fire

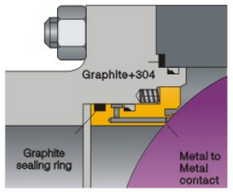

After Fire

Fire Safe Design

With the valve heated in a fire application, the nonmetal material parts such as seat sealing ring of PTFE, O–ring for the stem, and sealing gasket for body and bonnet, might be damaged due to high temperature. BAOYI's special design of auxiliary metal to metal or the graphite seal is provited for the trunnion ball valve to effectively prevent both internal and external leakage of the valve. As required by customers, BAOYI 's fire safe design for the trunnion ball valve meets the requirement of API 607, API 6Fa, BS 6755 and JB/T 6899.

Anti-static Design

By anti–static design, the ball, stem and body of the trunnion mounted ball valve forms a static channel through which the static electricity caused in the switching process of ball and body will be guide to the ground. Thus it can prevent the valve from the potential fire and explosion risk.

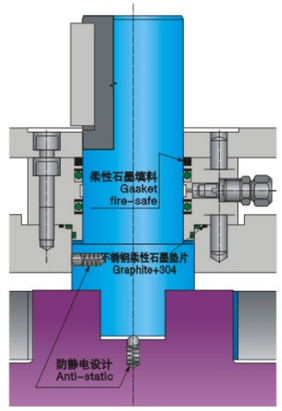

Single piston effect

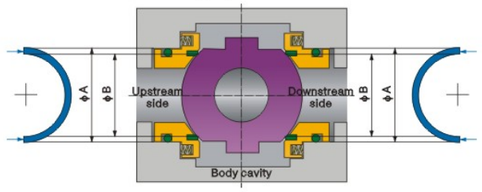

Pressure acting upstream and/or downstream

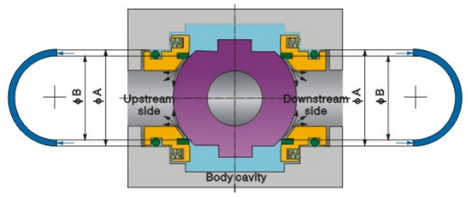

Double piston effect

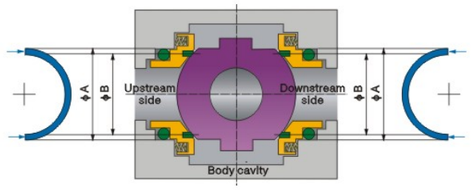

Pressure acting upstream and/or downstream

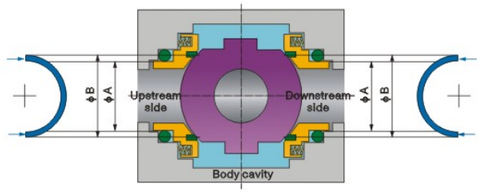

Pressure acting in the body cavity

Standard Single Piston Effct (self-relieving Seats)

Fluid pressure, both upstream and downstream, creates a resultant thrust that pushes the seat rings against the ball.

Fluid pressure acting in the body cavity creates a resultant thrust that pushes the seat rings away from the ball.

The single piston design permits the automatic release of any over pressure in the body cavity when the valve is in the fully open or fully closed position, therefore the seat rings are "self–relieving".

Optional Double Piston Effect

Fluid pressure, both upstream and down–stream, as well as in the body cavity creates a resultant thrust that pushes the seat rings towards the ball.

Valves with double piston effect seat rings require a relief valve in order to reduce the build–up of over pressure in the body cavity.

Mounting Pad Provided

Has provided for trunnion ball valve with amounting pad for fixing the actuators, such as worm gear, pneumatic, electric, hydraulic, and pneumatic & hydraulic acturtors.

Cast Steel
Trunnion Ball Valve

Technical Specifications

Design Basis		GB		API		ASME
Design Standard		GB/T 12237	GB/T 19672	API 608	API 6D	ASME B16.34
Face–to–Face		GB/T 12221	GB/T 19672	ASME B16.10	API 6D	ASME B16.10
Connection End	Flanged	GB/T 9113		ASME B16.5/MSS SP–44/ASME B16.47[a]		
	Butt–Welding	GB/T 12224		ASME B16.25		
Material		NACE MR0175				
Test and Inspection		JB/T 9092	GB/T 19672	API 598	API 6D	ASME B16.34
Fire Test		JB/T 6899		API 6FA/API 607		

The dimension of welded end connection can be designed and manufactured according to the buyers's request.

a.MSS SP–44 for size 22.
ASME B16.47 Series A for size 26 & over.

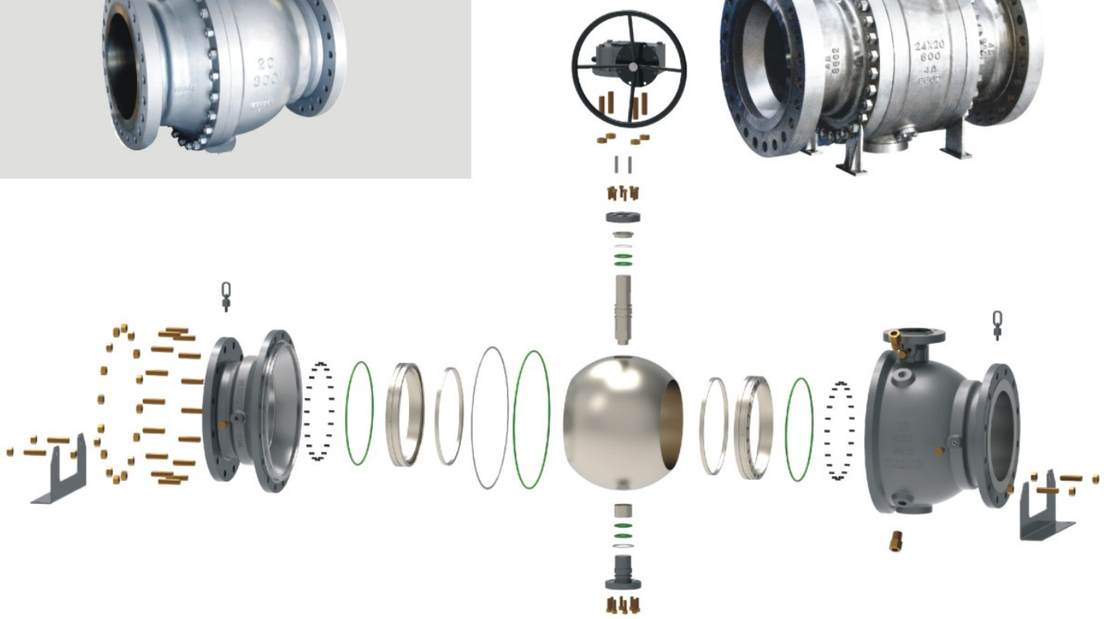

Cast Steel
Trunnion Ball Valve

Main Parts and Materials

Conventional Type

Part Name	Carbon Steel		Low Temp. Steel		Stainless Steel	
	GB	ASTM	GB	ASTM	GB	ASTM
Body	WCB	A216–WCB	LCB LCC	A352–LCB A352–LCC	CF8 CF8M	A351–CF8 A351–CF8M
Bolt/Nut	35CrMo 45	A193–B7 A194–2H	304 304	A320–L7 A194–4	304 304	A193–B8 A194–8
Ball	25+ENP	A105+ENP	0Cr18Ni9	A350–LF2+ENP	0Cr18Ni9 00Cr17Ni12Mo2	A182–F304 A182–F316
Stem	1Cr13 2Cr13	A276–410 A276–420	304	A350–LF2 A276–304	304 316	A276–304 A276–316
Seat	25+ENP	A105+ENP	304	A350 LF2+ENP	0Cr18Ni9 00Cr17Ni12Mo2	A182–F304 A182–F316
Seat insert	Standard: PTFE/NYLON Special: PEEK/DEVLON/VITON		Standard: PTFE/NYLON Special: PEEK/DEVLON/VITON		Standard: PTFE/NYLON Special: PEEK/DEVLON/VITON	
O–Ring	NBR OR VITON		NBR OR VITON		VITON	
Gasket	Graphite+ Stainless steel		Graphite+ Stainless steel		Graphite+ Stainless steel	

Main Parts and Materials

Sulfur-resisting type

Part Name	Carbon Steel		Low Temp. Steel		Stainless Steel	
	GB	ASTM	GB	ASTM	GB	ASTM
Body	WCB	A216–WCB	LCB LCC	A352–LCB A352–LCC	CF8 CF8M	A351–CF8 A351–CF8M
Bolt/Nut	35CrMo 45	A193–B7 A194–2H	304 304	A320–L7 A194–4	304 304	A193–B8 A194–8
Ball	25+ENP	A105+ENP	0Cr18Ni9	A350–LF2+ENP	0Cr18Ni9 00Cr17Ni12Mo2	A182–F304 A182–F316
Stem	17–4PH		For use at low temperatures resilient steels.		304 316	A276–304 A276–316
Seat	25+ENP	A105+ENP	304	A350 LF2+ENP	0Cr18Ni9 00Cr17Ni12Mo2	A182–F304 A182–F316
Seat insert	Standard: PTFE/NYLON Special: PEEK/DEVLON/VITON		Standard: PTFE/NYLON Special: PEEK/DEVLON/VITON		Standard: PTFE/NYLON Special: PEEK/DEVLON/VITON	
O–Ring	NBR OR VITON		NBR OR VITON		VITON	
Gasket	Graphite+ Stainless steel		Graphite+ Stainless steel		Graphite+ Stainless steel	

Cast Steel
Trunnion Ball Valve

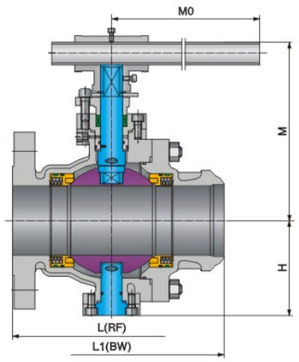

Lever–Operated

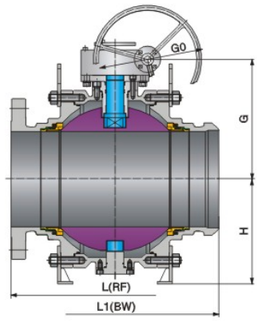

Worm Gear Operated

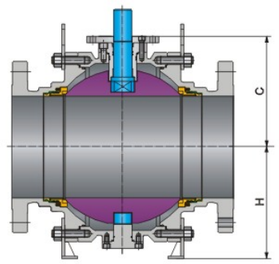

Bare Stem with Mounting Pad

Main External Dimensions

PN16/PN20/Class150

Full Bore — **Unit: mm**

DN	NPS	L (RF)	L1 (BW)	MA		GA		C	H	WT(Kg)	Torque (N·M)
				M	M0	G	G0				
50	2	178	216	168	250	--	--	115	85	10	57
65	$2^1/_2$	191	241	175	300	--	--	135	98	14	71
80	3	203	283	186	350	--	--	165	117	22	95
100	4	229	305	225	450	235	280	220	141	35	192
150	6	394	457	330	800	280	300	260	193	75	485
200	8	457	521	370	1000	398	400	300	240	111	832
250	10	533	559	--	--	495	400	350	293	217	1105
300	12	610	635	--	--	530	500	370	340	385	1655
350	14	686	762	--	--	580	500	400	372	457	2695
400	16	762	838	--	--	602	600	450	412	739	3164
450	18	864	914	--	--	640	600	510	462	930	3793
500	20	914	991	--	--	700	600	550	511	1657	5500
550	22	991	1092	--	--	740	600	580	556	2568	6650
600	24	1067	1143	--	--	823	700	650	601	2887	7529
650	26	1143	1245	--	--	895	700	700	700	3376	8693
700	28	1245	1346	--	--	906	700	720	780	4183	10770
750	30	1295	1397	--	--	968	700	770	800	4705	12365
800	32	1372	1524	--	--	1048	700	800	840	5735	14070
850	34	1473	1626	--	--	1098	700	830	860	6573	21148
900	36	1524	1727	--	--	1118	700	885	880	7537	22987
1000	40	1753	1956	--	--	1285	700	950	930	9848	26059
1050	42	1855	2083	--	--	1340	800	1000	960	11355	28149
1200	48	2134	2388	--	--	1435	800	1130	1070	17210	42776
1400	56	2489	2489	--	--	1478	800	1320	1250	26822	65654
1500	60	2640	2640	--	--	1560	1000	1400	1300	37822	85654
1600	64	--	--	--	--	--	--	--	--	--	--

Cast Steel
Trunnion Ball Valve

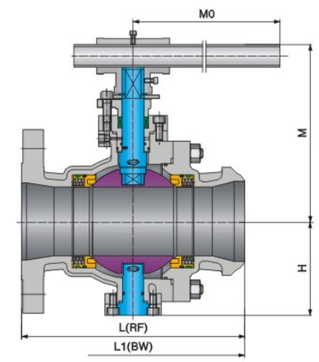

Lever–Operated

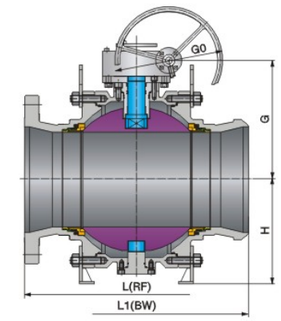

Worm Gear Operated

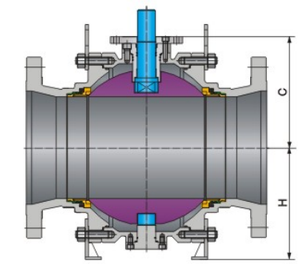

Bare Stem with Mounting Pad

Main External Dimensions

PN16/PN20/Class150

Reduced Bore — **Unit: mm**

DN×DN'	NPS×NPS'	L (RF)	L1 (BW)	MA		GA		C	H	WT(Kg)	Torque (N·M)
				M	M0	G	G0				
50×40	$2\times1^1/_2$	178	216	150	250	--	--	110	85	8.5	40
80×50	3×2	203	283	168	250	--	--	115	85	11.7	57
100×80	4×3	229	305	186	350	--	--	165	117	25	95
150×100	6×4	394	457	225	450	235	280	220	141	42.5	192
200×150	8×6	457	521	330	800	280	300	260	193	83	485
250×200	10×8	533	559	370	1000	398	400	300	240	123.4	832
300×250	12×10	610	635	--	--	495	400	350	293	235	1105
350×250	14×10	686	762	--	--	495	400	350	293	263	1105
350×300	14×12	686	762	--	--	530	500	370	340	405	1655
400×300	16×12	762	838	--	--	530	500	370	340	446	1655
400×350	16×14	762	838	--	--	580	500	400	372	491	2695
450×350	18×14	864	914	--	--	580	500	400	372	515	2695
450×400	18×16	864	914	--	--	602	600	450	412	778	3164
500×400	20×16	914	991	--	--	602	600	450	412	865	3164
500×450	20×18	914	991	--	--	640	600	510	462	1030	3793
600×500	24×20	1067	1143	--	--	700	600	550	511	1900	5500
750×600	30×24	1295	1397	--	--	823	700	650	601	3089	7529
900×750	36×30	1524	1727	--	--	968	700	770	800	3985	12365

Cast Steel
Trunnion Ball Valve

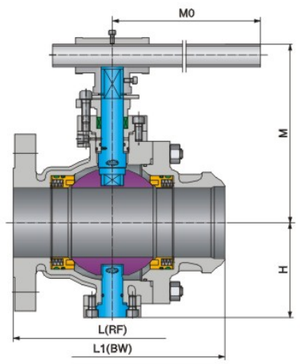

Lever–Operated

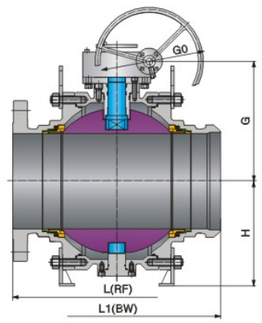

Worm Gear Operated

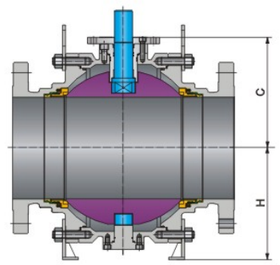

Bare Stem with Mounting Pad

Main External Dimensions

PN25/PN40/PN50/Class300

Full Bore — **Unit: mm**

DN	NPS	L (RF)	L1 (BW)	MA		GA		C	H	WT(Kg)	Torque (N·M)
				M	M0	G	G0				
50	2	216	216	168	250	--	--	115	85	15	99
65	$2^1/_2$	241	241	175	300	--	--	135	98	24	124
80	3	283	283	186	350	--	--	165	117	30	212
100	4	305	305	225	450	235	280	220	141	55	335
150	6	457	457	330	800	285	300	260	193	90	544
200	8	502	521	370	1000	398	400	300	240	201	1250
250	10	568	559	--	--	495	400	350	293	350	1736
300	12	648	635	--	--	530	500	370	340	510	2388
350	14	762	762	--	--	580	500	400	372	720	3224
400	16	838	838	--	--	602	600	450	412	1330	5139
450	18	914	914	--	--	640	600	510	462	1602	7970
500	20	991	991	--	--	712	600	562	511	1988	10570
550	22	1092	1092	--	--	799	600	620	556	2557	12140
600	24	1143	1143	--	--	826	700	656	601	3258	17240
650	26	1245	1245	--	--	895	700	700	700	3720	20340
700	28	1346	1346	--	--	906	700	720	780	4261	25069
750	30	1397	1397	--	--	968	700	770	800	5423	27640
800	32	1524	1524	--	--	1048	700	800	840	6558	29550
850	34	1626	1626	--	--	1098	700	830	860	7323	31558
900	36	1727	1727	--	--	1118	700	885	880	8254	35170
1000	40	1956	1956	--	--	1285	700	950	930	10577	39115
1050	42	2083	2083	--	--	1340	800	1000	960	12425	42414
1200	48	2170	2170	--	--	1435	800	1130	1070	19467	71868
1400	56	2743	2743	--	--	1490	1000	1325	1250	30825	108550

Cast Steel
Trunnion Ball Valve

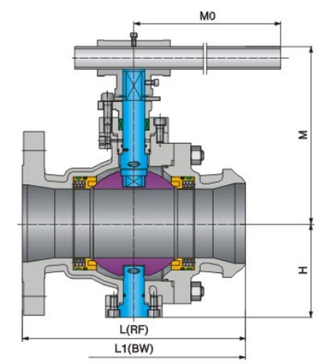

Lever–Operated

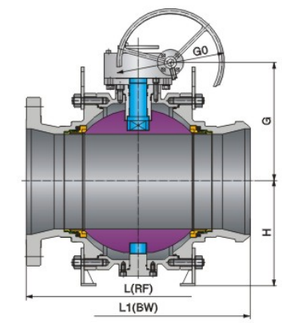

Worm Gear Operated

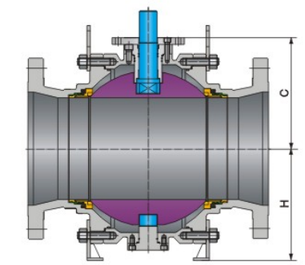

Bare Stem with Mounting Pad

Main External Dimensions

PN25/PN40/PN50/Class300

Reduced Bore — **Unit: mm**

DN×DN'	NPS×NPS'	L (RF)	L1 (BW)	MA		GA		C	H	WT(Kg)	Torque (N·M)
				M	M0	G	G0				
50×40	$2\times1^1/_2$	216	216	150	250	--	--	110	85	13	50
80×50	3×2	283	283	168	250	--	--	115	85	20	99
100×80	4×3	305	305	186	350	--	--	165	117	44	212
150×100	6×4	457	457	225	450	235	280	220	141	65	335
200×150	8×6	502	521	330	800	285	300	260	193	107	544
250×200	10×8	568	559	370	1000	398	400	300	240	222	1250
300×250	12×10	648	635	--	--	495	400	350	293	385	1736
350×250	14×10	762	762	--	--	495	400	350	293	430	1736
350×300	14×12	762	762	--	--	530	500	370	340	550	2388
400×300	16×12	838	838	--	--	530	500	370	340	598	2388
400×350	16×14	838	838	--	--	580	500	400	372	760	3224
450×350	18×14	914	914	--	--	580	500	400	372	810	3224
450×400	18×16	914	914	--	--	602	600	450	412	1450	5139
500×400	20×16	991	991	--	--	602	600	450	412	1550	5139
500×450	20×18	991	991	--	--	640	600	510	462	1759	7970
600×500	24×20	1143	1143	--	--	712	600	562	511	2365	10570
750×600	30×24	1397	1397	--	--	826	700	656	601	4045	17240
900×750	36×30	1727	1727	--	--	968	700	770	800	6381	27640

Cast Steel
Trunnion Ball Valve

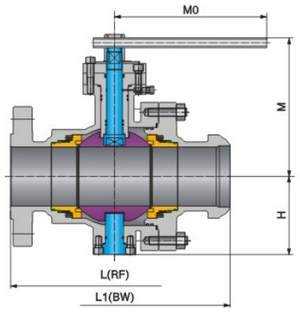

Lever–Operated

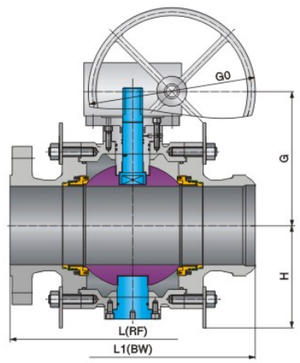

Worm Gear Operated

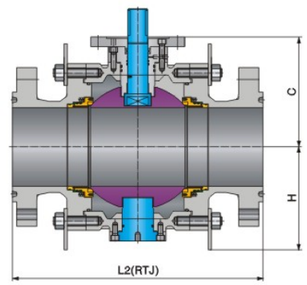

Bare Stem with Mounting Pad

Main External Dimensions

PN63/PN64/Class400

Full Bore **Unit: mm**

DN	NPS	L (RF)	L1 (BW)	L2 (RTJ)	MA		GA		C	H	WT(Kg)	Torque (N·M)
					M	M0	G	G0				
50	2	292	292	295	161	500	--	--	103	100	33	124
65	2 1/2	330	330	333	178	600	--	--	115	112	47	155
80	3	356	356	359	189	700	--	--	129	130	58	265
100	4	406	406	410	225	800	--	--	147	151	75	467
150	6	495	495	498	330	800	261	400	194	201	162	650
200	8	597	597	600	--	--	319	400	252	254	325	1806
250	10	673	673	676	--	--	369	500	303	308	440	2638
300	12	762	762	765	--	--	512	500	424	368	735	2929
350	14	826	826	829	--	--	537	500	450	382	985	3971
400	16	902	902	905	--	--	629	500	528	453	1440	6307
450	18	978	978	981	--	--	665	600	564	489	1710	9165
500	20	1054	1054	1060	--	--	762	600	641	562	2150	12155
550	22	1143	1143	1153	--	--	801	600	680	600	3228	15175
600	24	1232	1232	1241	--	--	837	600	716	636	3962	21550
650	26	1308	1308	1321	--	--	872	700	752	673	4740	25426
700	28	1397	1397	1410	--	--	907	700	787	708	5333	31336
750	30	1524	1524	1537	--	--	949	800	829	750	6240	34550
800	32	1651	1651	1667	--	--	1050	800	915	822	7410	36937
850	34	1778	1778	1794	--	--	1151	800	998	894	8150	39447
900	36	1880	1880	1895	--	--	1192	800	1039	935	9218	43962
1000	40	2250	2250	--	--	--	1276	800	1124	1020	12580	48894
1050	42	--	--	--	--	--	1318	800	1166	1061	16602	50300
1200	48	--	--	--	--	--	1508	1000	1372	1219	22583	80302

Cast Steel
Trunnion Ball Valve

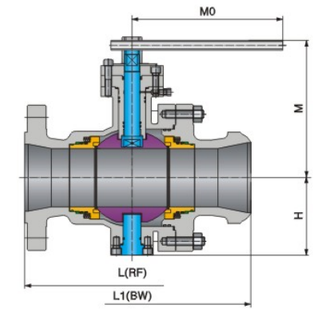

Lever–Operated

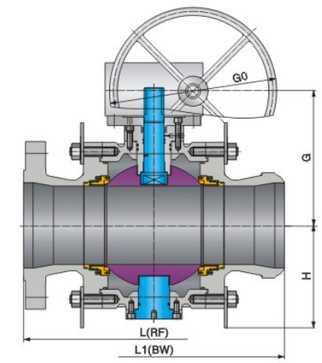

Worm Gear Operated

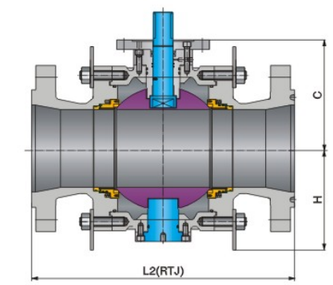

Bare Stem with Mounting Pad

Main External Dimensions

PN63/PN64/Class400

Reduced Bore **Unit: mm**

DN×DN'	NPS×NPS'	L (RF)	L1 (BW)	L2 (RTJ)	MA		GA		C	H	WT(Kg)	Torque (N·M)
					M	M0	G	G0				
50×40	2×1 1/2	292	292	295	150	400	--	--	100	100	33	98
80×50	3×2	356	356	359	161	500	--	--	103	100	37	124
100×80	4×3	406	406	410	189	700	--	--	129	130	58	265
150×100	6×4	495	495	498	225	800	--	--	147	151	85	467
200×150	8×6	597	597	600	330	800	261	400	194	201	158	650
250×200	10×8	673	673	676	--	--	319	400	252	254	310	1806
300×250	12×10	762	762	765	--	--	369	500	303	308	470	2638
350×250	14×10	826	826	829	--	--	369	500	303	308	510	2638
350×300	14×12	826	826	829	--	--	512	500	424	368	780	2929
400×300	16×12	902	902	905	--	--	512	500	424	368	850	2929
400×350	16×14	902	902	905	--	--	537	500	450	382	1055	3971
450×350	18×14	978	978	981	--	--	537	500	450	382	1158	3971
450×400	18×16	978	978	981	--	--	629	500	528	453	1580	6307
500×400	20×16	1054	1054	1060	--	--	629	500	528	453	1665	6307
500×450	20×18	1054	1054	1060	--	--	665	600	564	489	1900	9165
600×500	24×20	1232	1232	1241	--	--	762	600	641	562	2800	12155
750×600	30×24	1524	1524	1537	--	--	837	600	716	636	4158	21550
900×750	36×30	1880	1880	1895	--	--	949	800	829	750	6900	34550

Cast Steel
Trunnion Ball Valve

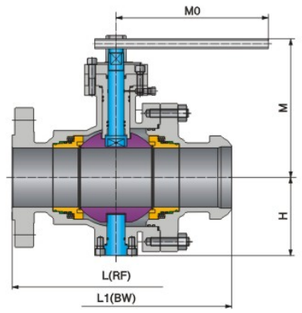

Lever–Operated

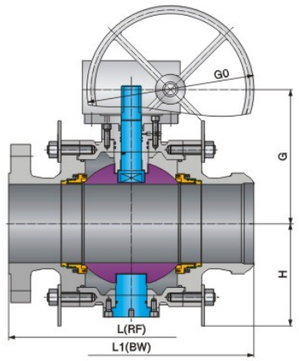

Worm Gear Operated

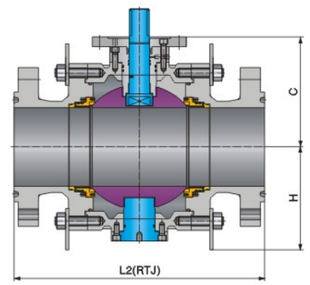

Bare Stem with Mounting Pad

Main External Dimensions

PN100/PN110/Class600

Full Bore **Unit: mm**

DN	NPS	L (RF)	L1 (BW)	L2 (RTJ)	MA		GA		C	H	WT(Kg)	Torque (N·M)
					M	M0	G	G0				
50	2	292	292	295	195	500	--	--	105	100	33	168
65	2 1/2	330	330	333	220	600	--	--	135	115	47	210
80	3	356	356	359	247	700	220	300	165	130	58	360
100	4	432	432	435	275	800	254	400	210	162	83	572
150	6	559	559	562	--	--	360	400	253	203	180	912
200	8	660	660	664	--	--	390	400	290	257	340	2177
250	10	787	787	791	--	--	450	500	333	310	530	3093
300	12	838	838	841	--	--	500	500	380	350	960	4282
350	14	889	889	892	--	--	520	500	395	360	1250	7458
400	16	991	991	994	--	--	550	500	433	413	1549	9310
450	18	1092	1092	1095	--	--	635	600	470	430	1830	14693
500	20	1194	1194	1200	--	--	675	600	505	490	2320	20011
550	22	1295	1295	1305	--	--	728	600	545	510	3899	24785
600	24	1397	1397	1407	--	--	780	600	595	570	4665	31226
650	26	1448	1448	1461	--	--	810	700	635	620	5751	35184
700	28	1549	1549	1562	--	--	840	700	665	690	6405	38987
750	30	1651	1651	1664	--	--	870	800	710	750	7056	41832
800	32	1778	1778	1794	--	--	915	800	755	780	8253	63865
850	34	1930	1930	1946	--	--	951	800	780	815	8978	71720
900	36	2083	2083	2099	--	--	987	1000	815	840	10182	89020
1000	40	2337	2337	2366	--	--	1212	1000	915	940	14584	109900
1050	42	2439	2439	2467	--	--	1292	1000	970	980	20779	121165
1200	48	2540	2540	2540	--	--	1440	1000	1105	1120	25699	145345
1400	56	2949	2949	2949	--	--	1600	1000	1300	1290	35700	169230

Cast Steel
Trunnion Ball Valve

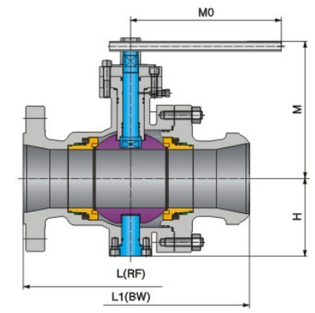

Lever–Operated

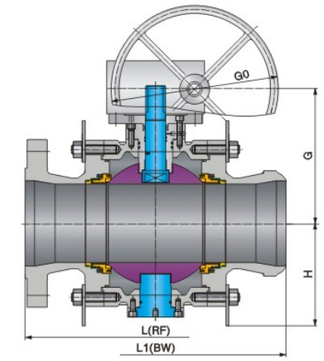

Worm Gear Operated

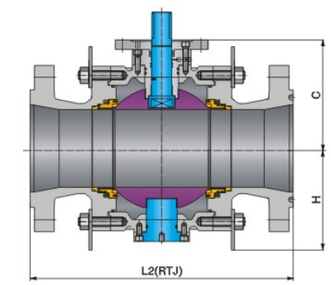

Bare Stem with Mounting Pad

Main External Dimensions

PN100/PN110/Class600

Reduced Bore **Unit: mm**

DN×DN'	NPS×NPS'	L (RF)	L1 (BW)	L2 (RTJ)	MA		GA		C	H	WT(Kg)	Torque (N·M)
					M	M0	G	G0				
50×40	2×1 1/2	292	292	295	182	500	--	--	105	100	33	130
80×50	3×2	356	356	359	195	500	--	--	105	100	37	168
100×80	4×3	432	432	435	247	700	220	300	165	130	72	360
150×100	6×4	559	559	562	275	800	254	400	210	162	103.5	572
200×150	8×6	660	660	664	--	--	360	400	253	203	208	912
250×200	10×8	787	787	791	--	--	390	400	290	257	396	2177
300×250	12×10	838	838	841	--	--	450	500	333	310	555	3093
350×250	14×10	889	889	892	--	--	450	500	333	310	586	3093
350×300	14×12	889	889	892	--	--	500	500	380	350	998	4282
400×300	16×12	991	991	994	--	--	500	500	380	350	1082	4282
400×350	16×14	991	991	994	--	--	520	500	395	360	1328	7458
450×350	18×14	1092	1092	1095	--	--	520	500	395	360	1425	7458
450×400	18×16	1092	1092	1095	--	--	550	500	433	413	1695	9310
500×400	20×16	1194	1194	1200	--	--	550	500	433	413	1778	9310
500×450	20×18	1194	1194	1200	--	--	635	600	470	430	2035	14693
600×500	24×20	1397	1397	1407	--	--	675	600	505	490	3235	20011
750×600	30×24	1651	1651	1664	--	--	780	600	595	570	4270	31226
900×750	36×30	2083	2083	2099	--	--	870	800	710	750	7420	41832

Cast Steel
Trunnion Ball Valve

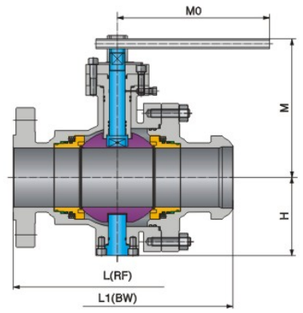

Lever–Operated

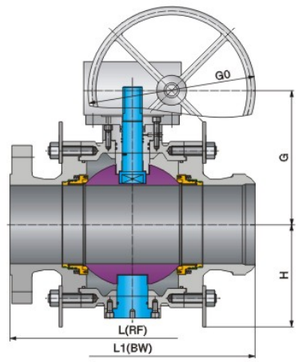

Worm Gear Operated

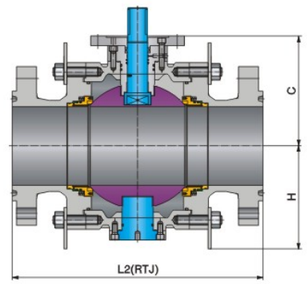

Bare Stem with Mounting Pad

Main External Dimensions

PN150/PN160/Class900

Full Bore **Unit: mm**

DN	NPS	L (RF)	L1 (BW)	L2 (RTJ)	MA		GA		C	H	WT(Kg)	Torque (N·M)
					M	M0	G	G0				
50	2	368	368	371	217	650	--	--	105	110	39	228
65	$2^1/_2$	419	419	422	241	650	--	--	135	118	55	263
80	3	381	381	384	259	800	255	400	165	130	68	512
100	4	457	457	460	--	--	285	400	210	167	98	946
150	6	610	610	613	--	--	370	400	260	251	220	1784
200	8	737	737	740	--	--	410	500	305	280	500	4116
250	10	838	838	841	--	--	480	500	368	340	942	5910
300	12	965	965	968	--	--	525	500	405	390	1200	10137
350	14	1029	1029	1038	--	--	545	500	425	442	1655	14141
400	16	1130	1130	1140	--	--	580	600	470	490	1998	18866
450	18	1219	1219	1232	--	--	625	600	505	500	2415	22400
500	20	1321	1321	1334	--	--	666	600	560	500	3135	28544
550	22	--	--	--	--	--	--	--	--	--	--	--
600	24	1549	1549	1568	--	--	835	700	640	630	5495	43276
650	26	1651	1651	1673	--	--	875	700	668	650	6565	48580
700	28	1753	1753	1775	--	--	930	800	700	710	7735	60000
750	30	1880	1880	1902	--	--	1005	1000	750	780	8946	76000
800	32	2032	2032	2054	--	--	1275	1000	800	810	10568	90195
850	34	2159	2159	2188	--	--	1315	1000	835	850	14550	100460
900	36	2286	2286	2315	--	--	1340	1000	880	900	15572	131875

Cast Steel
Trunnion Ball Valve

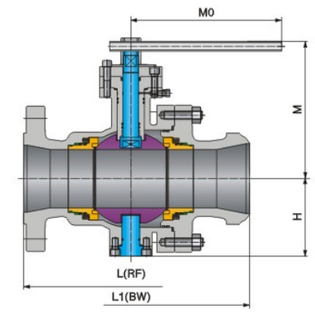

Lever–Operated

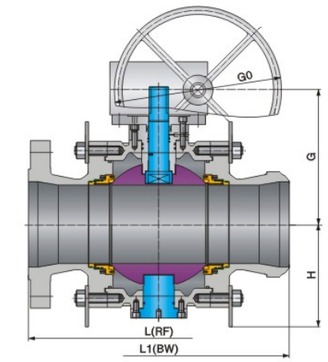

Worm Gear Operated

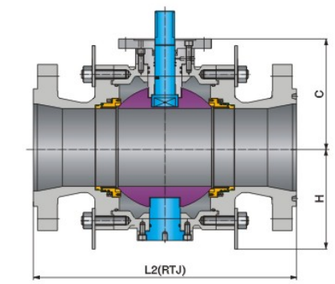

Bare Stem with Mounting Pad

Main External Dimensions

PN150/PN160/Class900

Reduced Bore **Unit: mm**

DN×DN'	NPS×NPS'	L (RF)	L1 (BW)	L2 (RTJ)	MA		GA		C	H	WT(Kg)	Torque (N·M)
					M	M0	G	G0				
50×40	$2\times1^1/_2$	368	368	371	206	650	--	--	100	108	35	163
80×50	3×2	381	381	384	217	650	--	--	105	110	44	228
100×80	4×3	457	457	460	259	800	255	400	165	130	82	512
150×100	6×4	610	610	613	--	--	285	400	210	167	127	946
200×150	8×6	737	737	740	--	--	370	400	260	251	263	1784
250×200	10×8	838	838	841	--	--	410	500	305	280	551	4116
300×250	12×10	965	965	968	--	--	480	500	368	340	1010	5910
350×250	14×10	1029	1029	1038	--	--	480	500	368	340	1184	5910
350×300	14×12	1029	1029	1038	--	--	525	500	405	390	1380	10137
400×300	16×12	1130	1130	1140	--	--	525	500	405	390	1560	10137
400×350	16×14	1130	1130	1140	--	--	545	500	425	442	1855	14141
450×350	18×14	1219	1219	1232	--	--	545	500	425	442	1960	14141
450×400	18×16	1219	1219	1232	--	--	580	600	470	490	2130	18866
500×400	20×16	1321	1321	1334	--	--	580	600	470	490	2495	18866
500×450	20×18	1321	1321	1334	--	--	625	600	505	500	2730	22400
600×500	24×20	1549	1549	1568	--	--	666	600	560	500	3995	28544
750×600	30×24	1880	1880	1902	--	--	835	700	640	630	7200	43276
900×750	36×30	2286	2286	2315	--	--	1005	1000	750	780	10778	76000

Cast Steel
Trunnion Ball Valve

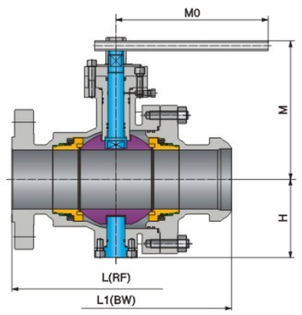

Lever–Operated

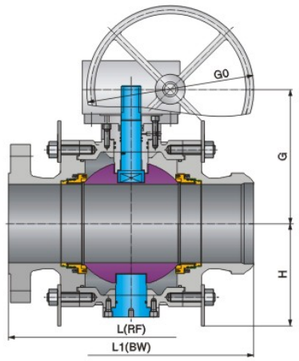

Worm Gear Operated

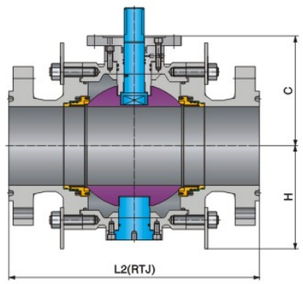

Bare Stem with Mounting Pad

Main External Dimensions

PN250/PN260/Class1500

Full Bore — **Unit: mm**

DN	NPS	L (RF)	L1 (BW)	L2 (RTJ)	MA		GA		C	H	WT(Kg)	Torque (N·M)
					M	M0	G	G0				
50	2	368	368	371	237	800	--	--	105	105	40	390
65	2 1/2	419	419	422	261	800	--	--	138	120	63	448
80	3	470	470	473	269	1000	255	500	165	130	95	931
100	4	546	546	549	297	1000	285	500	215	167	180	1524
150	6	705	705	711	--	--	460	500	260	270	400	2934
200	8	832	832	841	--	--	520	500	300	300	750	7215
250	10	991	991	1000	--	--	640	500	365	360	1165	10990
300	12	1130	1130	1146	--	--	720	500	420	423	1725	16103
350	14	1257	1257	1276	--	--	760	500	440	460	2080	24518
400	16	1384	1384	1407	--	--	820	600	480	510	3718	29630
450	18	1537	1537	1559	--	--	880	600	550	600	5065	34392
500	20	1664	1664	1686	--	--	900	700	620	650	7612	40918
550	22	--	--	--	--	--	--	--	--	--	--	--
600	24	--	--	1972	--	--	920	800	700	720	11387	65351

Cast Steel
Trunnion Ball Valve

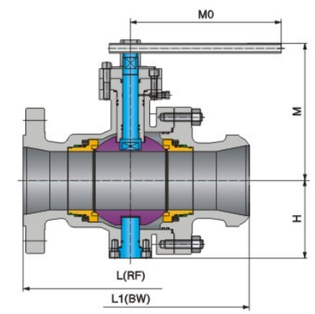

Lever–Operated

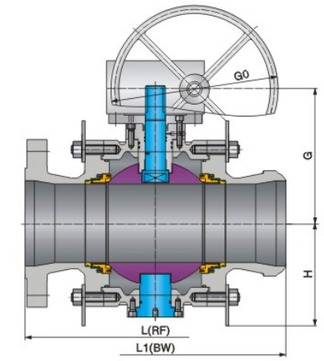

Worm Gear Operated

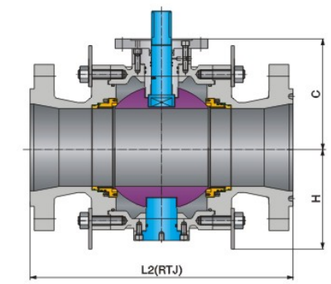

Bare Stem with Mounting Pad

Main External Dimensions

PN250/PN260/Class1500

Reduced Bore — **Unit: mm**

DN×DN'	NPS×NPS'	L (RF)	L1 (BW)	L2 (RTJ)	MA		GA		C	H	WT(Kg)	Torque (N·M)
					M	M0	G	G0				
50×40	2×1 1/2	368	368	371	230	700	--	--	105	105	36	181
80×50	3×2	470	470	473	237	800	--	--	105	105	50	390
100×80	4×3	546	546	549	269	1000	255	500	165	130	108	931
150×100	6×4	705	705	711	297	1000	285	500	215	167	225	1524
200×150	8×6	832	832	841	--	--	460	500	260	270	485	2934
250×200	10×8	991	991	1000	--	--	520	500	300	300	966	7215
300×250	12×10	1130	1130	1146	--	--	640	500	365	360	1267	10990
350×250	14×10	1257	1257	1276	--	--	640	500	365	360	1465	10990
350×300	14×12	1257	1257	1276	--	--	720	500	420	423	1825	16103
400×300	16×12	1384	1384	1407	--	--	720	500	420	423	1900	16103
400×350	16×14	1384	1384	1407	--	--	760	500	440	460	2280	24518
450×350	18×14	1537	--	1559	--	--	760	500	440	460	2795	24518
450×400	18×16	1537	--	1559	--	--	820	600	480	510	4720	29630
500×400	20×16	1664	--	1686	--	--	820	600	480	510	5052	29630
500×450	20×18	1664	--	1686	--	--	880	600	550	600	6392	34392
600×500	24×20	--	--	1972	--	--	900	700	620	650	8737	40918

Forged Steel Trunnion Ball Valve

Technical Specifications

Design Basis		GB		API		ASME
Design Standard		GB/T 12237	GB/T 19672	API 608	API 6D	ASME B16.34
Face-to-Face		GB/T 12221	GB/T 19672	ASME B16.10	API 6D	ASME B16.10
Connection End	Flanged	GB/T 9113		ASME B16.5/MSS SP-44/ASME B16.47[a]		
	Butt-Welding	GB/T 12224		ASME B16.25		
Material		NACE MR0175				
Test and Inspection		JB/T 9092	GB/T 19672	API 598	API 6D	ASME B16.34
Fire Test		JB/T 6899		API 6FA/API607		

The dimension of welded end connection can be designed and manufactured according to the buyers's request.

a.MSS SP-44 for size 22.
ASME B16.47 Series A for size 26 & over.

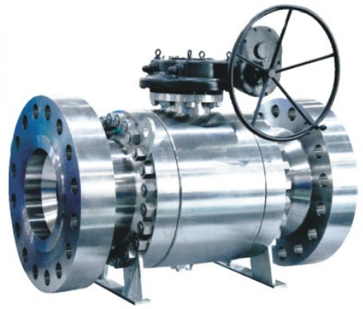

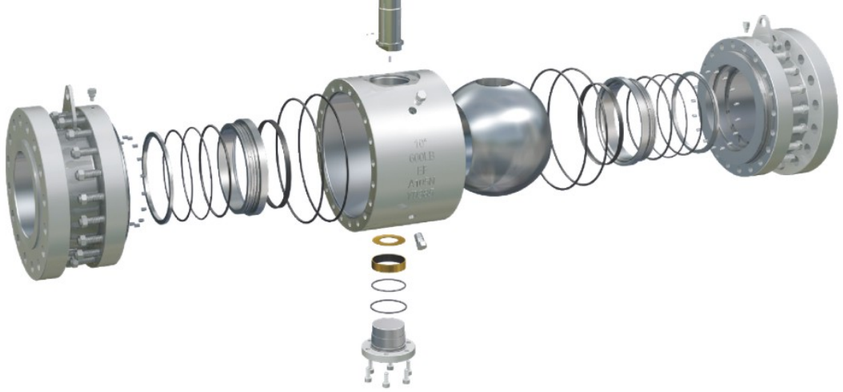

Forged Steel Trunnion Ball Valve

Main Parts and Materials

Conventional Type

Part Name	Carbon Steel		Low Temp. Steel		Stainless Steel	
	GB	ASTM	GB	ASTM	GB	ASTM
Body	25	A105	0Cr18Ni9	A350-LF2	0Cr18Ni9 00Cr17Ni12Mo2	A182-F304 A182-F316
Bolt/Nut	35CrMo 45	A193-B7 A194-2H	304 304	A320-L7 A194-4	304 304	A193-B8 A194-8
Ball	25+ENP	A105+ENP	0Cr18Ni9	A350-LF2+ENP	0Cr18Ni9 00Cr17Ni12Mo2	A182-F304 A182-F316
Stem	1Cr13 2Cr13	A276-410 A276-420	304	A350-LF2 A276-304	304 316	A276-304 A276-316
Seat	25+ENP	A105+ENP	304	A350 LF2+ENP	0Cr18Ni9 00Cr17Ni12Mo2	A182-F304 A182-F316
Seat insert	Standard: PTFE/NYLON Special: PEEK/DEVLON/VITON		Standard: PTFE/NYLON Special: PEEK/DEVLON/VITON		Standard: PTFE/NYLON Special: PEEK/DEVLON/VITON	
O-Ring	NBR OR VITON		NBR OR VITON		VITON	
Gasket	Graphite+ Stainless steel		Graphite+ Stainless steel		Graphite+ Stainless steel	

Main Parts and Materials

Sulfur-resisting type

Part Name	Carbon Steel		Low Temp. Steel		Stainless Steel	
	GB	ASTM	GB	ASTM	GB	ASTM
Body	25	A105	0Cr18Ni9	A350-LF2	0Cr18Ni9 00Cr17Ni12Mo2	A182-F304 A182-F316
Bolt/Nut	35CrMo 45	A193-B7 A194-2H	304 304	A320-L7 A194-4	304 304	A193-B8 A194-8
Ball	25+ENP	A105+ENP	0Cr18Ni9	A350-LF2+ENP	0Cr18Ni9 00Cr17Ni12Mo2	A182-F304 A182-F316
Stem	17-4PH		For use at low temperatures resilient steels.		304 316	A276-304 A276-316
Seat	25+ENP	A105+ENP	304	A350 LF2+ENP	0Cr18Ni9 00Cr17Ni12Mo2	A182-F304 A182-F316
Seat insert	Standard: PTFE/NYLON Special: PEEK/DEVLON/VITON		Standard: PTFE/NYLON Special: PEEK/DEVLON/VITON		Standard: PTFE/NYLON Special: PEEK/DEVLON/VITON	
O-Ring	NBR OR VITON		NBR OR VITON		VITON	
Gasket	Graphite+ Stainless steel		Graphite+ Stainless steel		Graphite+ Stainless steel	

Forged Steel Trunnion Ball Valve

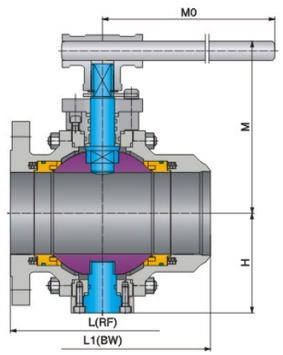

Lever–Operated

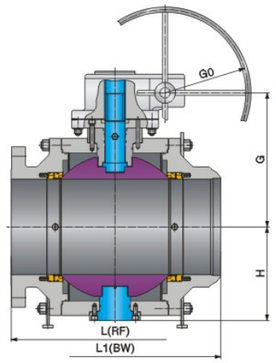

Worm Gear Operated

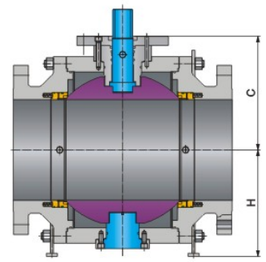

Bare Stem with Mounting Pad

Main External Dimensions

PN16/PN20/Class150

Full Bore — **Unit: mm**

DN	NPS	L (RF)	L1 (BW)	MA		GA		C	H	WT(Kg)	Torque (N·M)
				M	M0	G	G0				
50	2	178	216	130	250	--	--	105	100	28	57
65	$2^1/_2$	191	241	142	300	--	--	130	110	39	71
80	3	203	283	191	350	185	280	155	125	49	95
100	4	229	305	200	500	235	280	200	160	88	192
150	6	394	457	226	800	325	300	250	185	160	485
200	8	457	521	242	1000	390	400	278	222	248	832
250	10	533	559	--	--	445	400	323	280	379	1105
300	12	610	635	--	--	520	500	340	303	571	1655
350	14	686	762	--	--	550	500	375	330	759	2695
400	16	762	838	--	--	580	600	410	355	1150	3164
450	18	864	914	--	--	605	600	440	390	1192	3793
500	20	914	991	--	--	610	600	495	430	1769	5500
550	22	991	1092	--	--	670	600	525	475	2367	6650
600	24	1067	1143	--	--	725	700	585	520	3450	7529
650	26	1143	1245	--	--	760	700	630	560	4050	8693
700	28	1245	1346	--	--	790	700	645	650	4830	10770
750	30	1295	1397	--	--	825	700	690	700	5960	12365
800	32	1372	1524	--	--	870	700	740	745	7480	14070
850	34	1473	1626	--	--	910	700	760	775	8032	21148
900	36	1524	1727	--	--	950	700	810	805	9100	22987
1000	40	1753	1956	--	--	1005	700	895	900	14100	26059
1050	42	1790	2083	--	--	1045	800	950	935	15320	28149
1200	48	1995	2388	--	--	1235	800	1095	1070	22000	42776
1400	56	2489	2489	--	--	1450	800	1300	1250	34150	65654
1500	60	2640	2640	--	--	1550	1000	1380	1350	42500	85654
1600	64	--	--	--	--	--	--	--	--	--	--

Forged Steel Trunnion Ball Valve

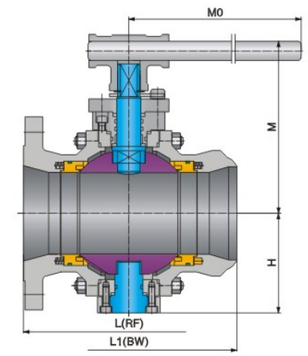

Lever–Operated

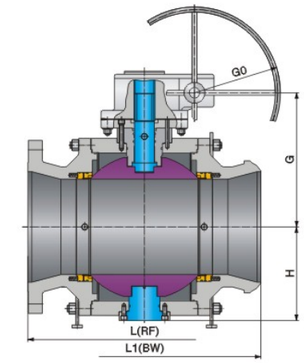

Worm Gear Operated

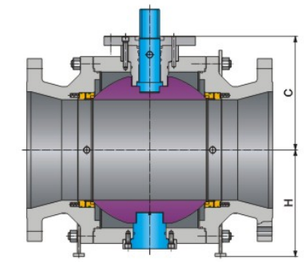

Bare Stem with Mounting Pad

Main External Dimensions

PN16/PN20/Class150

Reduced Bore — **Unit: mm**

DN×DN'	NPS×NPS'	L (RF)	L1 (BW)	MA		GA		C	H	WT(Kg)	Torque (N·M)
				M	M0	G	G0				
50×40	$2\times1^1/_2$	178	216	100	200	--	--	95	100	26	28
80×50	3×2	203	283	130	250	--	--	105	100	32	57
100×80	4×3	229	305	191	350	185	280	155	125	63	95
150×100	6×4	394	457	200	500	235	280	200	160	118	192
200×150	8×6	457	521	226	800	325	300	250	185	190	485
250×200	10×8	533	559	242	1000	390	400	278	222	290	832
300×250	12×10	610	635	--	--	445	400	323	280	465	1105
350×250	14×10	686	762	--	--	445	400	323	280	532	1105
350×300	14×12	686	762	--	--	520	500	340	303	622	1655
400×300	16×12	762	838	--	--	520	500	340	303	730	1655
400×350	16×14	762	838	--	--	550	500	375	330	830	2695
450×350	18×14	864	914	--	--	550	500	375	330	995	2695
450×400	18×16	864	914	--	--	580	600	410	355	1030	3164
500×400	20×16	914	991	--	--	580	600	410	355	1315	3164
500×450	20×18	914	991	--	--	605	600	440	390	1420	3793
600×500	24×20	1067	1143	--	--	610	600	495	430	2048	5500
750×600	30×24	1295	1397	--	--	725	700	585	520	3830	7529
900×750	36×30	1524	1727	--	--	825	700	690	700	7100	12365

Forged Steel Trunnion Ball Valve

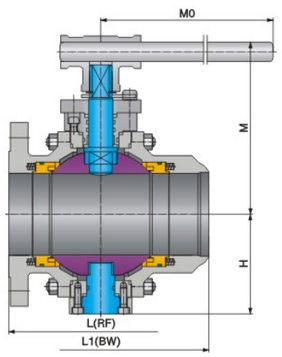

Lever–Operated

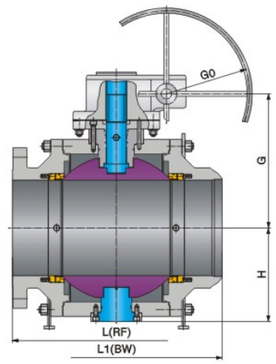

Worm Gear Operated

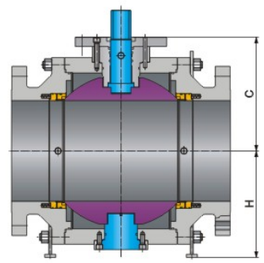

Bare Stem with Mounting Pad

Main External Dimensions

PN25/PN40/PN50/Class300

Full Bore **Unit: mm**

DN	NPS	L (RF)	L1 (BW)	MA		GA		C	H	WT(Kg)	Torque (N·M)
				M	M0	G	G0				
50	2	216	216	130	250	--	--	105	100	29	99
65	$2^1/_2$	241	241	142	350	--	--	130	110	40	124
80	3	283	283	191	400	185	280	155	125	57	212
100	4	305	305	200	500	235	280	200	160	97	335
150	6	457	457	226	800	325	300	250	203	185	544
200	8	502	521	242	1000	390	400	278	232	287	1250
250	10	568	559	--	--	445	400	333	298	507	1736
300	12	648	635	--	--	520	500	360	333	740	2388
350	14	762	762	--	--	550	500	395	350	1038	3224
400	16	838	838	--	--	580	600	433	398	1452	5139
450	18	914	914	--	--	605	600	460	410	1648	7970
500	20	991	991	--	--	610	600	505	470	2207	10570
550	22	1092	1092	--	--	670	600	530	485	2797	12140
600	24	1143	1143	--	--	725	700	590	550	3940	17240
650	26	1245	1245	--	--	760	700	635	585	4670	20340
700	28	1346	1346	--	--	790	700	645	670	5780	25069
750	30	1397	1397	--	--	825	700	700	730	6600	27640
800	32	1524	1524	--	--	870	700	750	770	7940	29550
850	34	1626	1626	--	--	910	700	760	800	9100	31558
900	36	1727	1727	--	--	950	700	810	825	10150	35170
1000	40	1956	1956	--	--	1005	700	905	920	13800	39115
1050	42	2083	2083	--	--	1045	800	960	955	16120	42414
1200	48	2170	2170	--	--	1235	800	1100	1105	24070	71868
1400	56	2743	2743	--	--	1450	1000	1300	1275	38200	108550

Forged Steel Trunnion Ball Valve

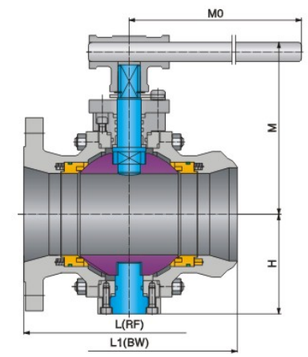

Lever–Operated

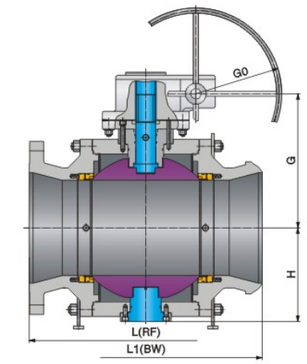

Worm Gear Operated

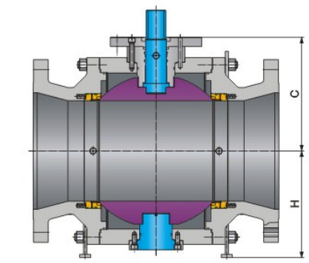

Bare Stem with Mounting Pad

Main External Dimensions

PN25/PN40/PN50/Class300

Reduced Bore **Unit: mm**

DN×DN'	NPS×NPS'	L (RF)	L1 (BW)	MA		GA		C	H	WT(Kg)	Torque (N·M)
				M	M0	G	G0				
50×40	$2\times1^1/_2$	216	216	100	250	--	--	95	100	27	50
80×50	3×2	283	283	130	250	--	--	105	100	34	99
100×80	4×3	305	305	191	400	185	280	155	125	65	212
150×100	6×4	457	457	200	500	235	280	200	160	118	335
200×150	8×6	502	521	226	800	325	300	250	203	222	544
250×200	10×8	568	559	242	1000	390	400	278	232	297	1250
300×250	12×10	648	635	--	--	445	400	333	298	507	1736
350×250	14×10	762	762	--	--	445	400	333	298	648	1736
350×300	14×12	762	762	--	--	520	500	360	333	820	2388
400×300	16×12	838	838	--	--	520	500	360	333	970	2388
400×350	16×14	838	838	--	--	550	500	395	350	1130	3224
450×350	18×14	914	914	--	--	550	500	395	350	1420	3224
450×400	18×16	914	914	--	--	580	600	433	398	1598	5139
500×400	20×16	991	991	--	--	580	600	433	398	1668	5139
500×450	20×18	991	991	--	--	605	600	460	410	1797	7970
600×500	24×20	1143	1143	--	--	610	600	505	470	2667	10570
750×600	30×24	1397	1397	--	--	725	700	590	550	4490	17240
900×750	36×30	1727	1727	--	--	825	700	700	730	8190	27640

Forged Steel Trunnion Ball Valve

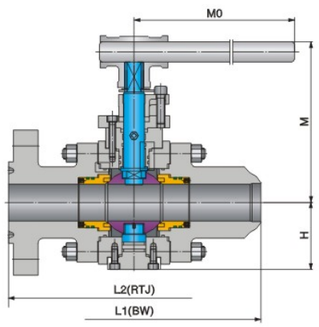

Lever–Operated

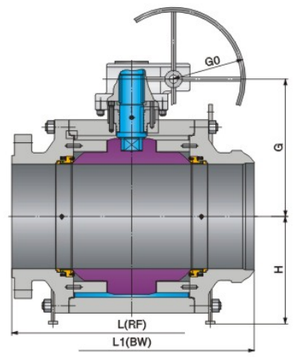

Worm Gear Operated

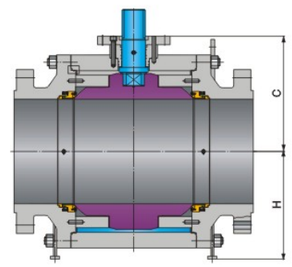

Bare Stem with Mounting Pad

Main External Dimensions

PN63/PN64/Class400

Full Bore — **Unit: mm**

DN	NPS	L (RF)	L1 (BW)	L2 (RTJ)	MA		GA		C	H	WT(Kg)	Torque (N·M)
					M	M0	G	G0				
50	2	292	292	295	136	500	--	--	105	100	25	124
65	2 1/2	330	330	333	164	650	--	--	135	115	35	155
80	3	356	356	359	191	650	220	300	165	130	56	265
100	4	406	406	410	244	800	254	400	210	162	90	467
150	6	495	495	498	--	--	350	400	243	203	249	650
200	8	597	597	600	--	--	385	400	285	257	458	1806
250	10	673	673	676	--	--	440	500	323	310	676	2638
300	12	762	762	765	--	--	490	500	370	350	939	2929
350	14	826	826	829	--	--	510	500	385	360	1166	3971
400	16	902	902	905	--	--	545	500	428	413	1397	6307
450	18	978	978	981	--	--	630	600	465	430	1960	9165
500	20	1054	1054	1060	--	--	670	600	500	490	2649	12155
550	22	1143	1143	1153	--	--	720	600	540	510	3286	15175
600	24	1232	1232	1241	--	--	772	600	590	570	3936	21550
650	26	1308	1308	1321	--	--	805	700	630	620	4990	25426
700	28	1397	1397	1410	--	--	832	700	660	690	5718	31336
750	30	1524	1524	1537	--	--	860	800	705	750	6850	34550
800	32	1651	1651	1667	--	--	910	800	748	780	7766	36937
850	34	1778	1778	1794	--	--	946	800	775	815	9507	39447
900	36	1880	1880	1895	--	--	980	800	810	840	11077	43962
1000	40	2250	2250	--	--	--	1205	800	910	940	14138	48894
1050	42	--	--	--	--	--	1285	800	965	980	16679	50300
1200	48	--	--	--	--	--	1435	1000	1100	1120	23179	80302

Forged Steel Trunnion Ball Valve

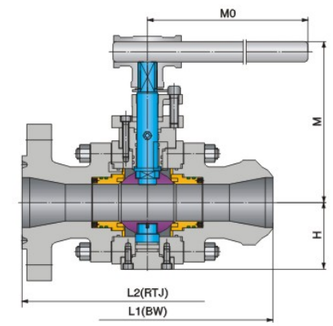

Lever–Operated

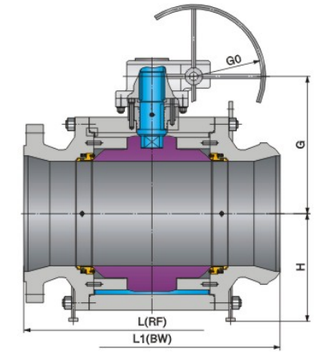

Worm Gear Operated

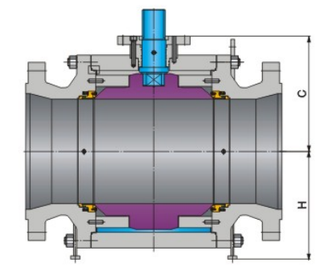

Bare Stem with Mounting Pad

Main External Dimensions

PN63/PN64/Class400

Reduced Bore — **Unit: mm**

DN×DN'	NPS×NPS'	L (RF)	L1 (BW)	L2 (RTJ)	MA		GA		C	H	WT(Kg)	Torque (N·M)
					M	M0	G	G0				
50×40	2×1 1/2	292	292	295	130	400	--	--	100	100	22	98
80×50	3×2	356	356	359	136	500	--	--	105	100	36	124
100×80	4×3	406	406	410	191	650	220	300	165	130	47	265
150×100	6×4	495	495	498	244	800	254	400	210	162	127	467
200×150	8×6	597	597	600	--	--	350	400	243	203	280	650
250×200	10×8	673	673	676	--	--	385	400	285	257	508	1806
300×250	12×10	762	762	765	--	--	440	500	323	310	746	2638
350×250	14×10	826	826	829	--	--	440	500	323	310	845	2638
350×300	14×12	826	826	829	--	--	490	500	370	350	1060	2929
400×300	16×12	902	902	905	--	--	490	500	370	350	1230	2929
400×350	16×14	902	902	905	--	--	510	500	385	360	1330	3971
450×350	18×14	978	978	981	--	--	510	500	385	360	1480	3971
450×400	18×16	978	978	981	--	--	545	500	428	413	1592	6307
500×400	20×16	1054	1054	1060	--	--	545	500	428	413	1887	6307
500×450	20×18	1054	1054	1060	--	--	630	600	465	430	2197	9165
600×500	24×20	1232	1232	1241	--	--	670	600	500	490	3160	12155
750×600	30×24	1524	1524	1537	--	--	772	600	590	570	5580	21550
900×750	36×30	1880	1880	1895	--	--	860	800	705	750	9520	34550

Forged Steel Trunnion Ball Valve

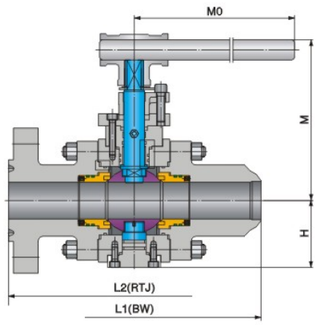

Lever–Operated

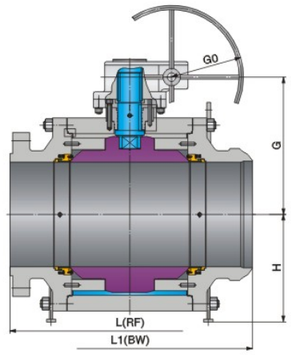

Worm Gear Operated

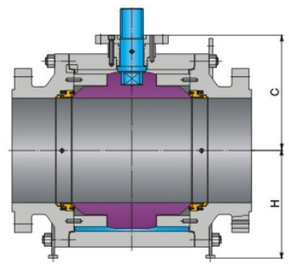

Bare Stem with Mounting Pad

Main External Dimensions

PN100/PN110/Class600

Full Bore — **Unit: mm**

DN	NPS	L (RF)	L1 (BW)	L2 (RTJ)	MA		GA		C	H	WT(Kg)	Torque (N·M)
					M	M0	G	G0				
50	2	292	292	295	136	500	--	--	105	100	33	168
65	2 1/2	330	330	333	164	650	--	--	135	115	43	210
80	3	356	356	359	191	650	220	300	165	130	64	360
100	4	432	432	435	244	800	254	400	210	162	124	572
150	6	559	559	562	--	--	360	400	253	203	255	912
200	8	660	660	664	--	--	390	400	290	257	487	2177
250	10	787	787	791	--	--	450	500	333	310	760	3093
300	12	838	838	841	--	--	500	500	380	350	984	4282
350	14	889	889	892	--	--	520	500	395	360	1266	7458
400	16	991	991	994	--	--	550	500	433	413	1532	9310
450	18	1092	1092	1095	--	--	635	600	470	430	2097	14693
500	20	1194	1194	1200	--	--	675	600	505	490	2640	20011
550	22	1295	1295	1305	--	--	728	600	545	510	3790	24785
600	24	1397	1397	1407	--	--	780	600	595	570	4740	31226
650	26	1448	1448	1461	--	--	810	700	635	620	5650	35184
700	28	1549	1549	1562	--	--	840	700	665	690	6760	38987
750	30	1651	1651	1664	--	--	870	800	710	750	8380	41832
800	32	1778	1778	1794	--	--	915	800	755	780	9740	63865
850	34	1930	1930	1946	--	--	951	800	780	815	11340	71720
900	36	2083	2083	2099	--	--	987	1000	815	840	13300	89020
1000	40	2337	2337	2366	--	--	1212	1000	915	940	18340	109900
1050	42	2439	2439	2467	--	--	1292	1000	970	980	21550	121165
1200	48	2540	2540	2540	--	--	1440	1000	1105	1120	31500	145345
1400	56	2949	2949	2949	--	--	1600	1000	1300	1290	48050	169230

Forged Steel Trunnion Ball Valve

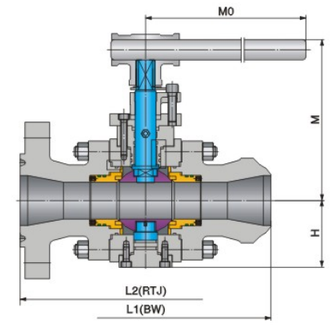

Lever–Operated

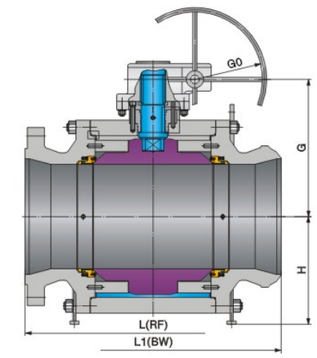

Worm Gear Operated

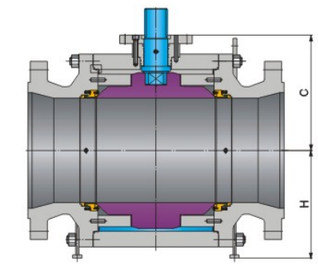

Bare Stem with Mounting Pad

Main External Dimensions

PN100/PN110/Class600

Reduced Bore — **Unit: mm**

DN×DN'	NPS×NPS'	L (RF)	L1 (BW)	L2 (RTJ)	MA		GA		C	H	WT(Kg)	Torque (N·M)
					M	M0	G	G0				
50×40	2×1 1/2	292	292	295	110	350	--	--	95	100	30	130
80×50	3×2	356	356	359	136	500	--	--	105	100	40	168
100×80	4×3	432	432	435	191	650	220	300	165	130	80	360
150×100	6×4	559	559	562	244	800	254	400	210	162	153	572
200×150	8×6	660	660	664	--	--	360	400	253	203	290	912
250×200	10×8	787	787	791	--	--	390	400	290	257	547	2177
300×250	12×10	838	838	841	--	--	450	500	333	310	810	3093
350×250	14×10	889	889	892	--	--	450	500	333	310	915	3093
350×300	14×12	889	889	892	--	--	500	500	380	350	1140	4282
400×300	16×12	991	991	994	--	--	500	500	380	350	1350	4282
400×350	16×14	991	991	994	--	--	520	500	395	360	1450	7458
450×350	18×14	1092	1092	1095	--	--	520	500	395	360	1530	7458
450×400	18×16	1092	1092	1095	--	--	550	500	433	413	1682	9310
500×400	20×16	1194	1194	1200	--	--	550	500	433	413	2087	9310
500×450	20×18	1194	1194	1200	--	--	635	600	470	430	2377	14693
600×500	24×20	1397	1397	1407	--	--	675	600	505	490	3250	20011
750×600	30×24	1651	1651	1664	--	--	780	600	595	570	6200	31226
900×750	36×30	2083	2083	2099	--	--	870	800	710	750	10500	41832

Forged Steel Trunnion Ball Valve

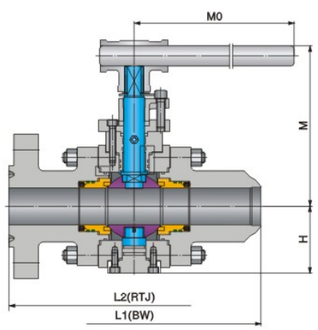

Lever–Operated

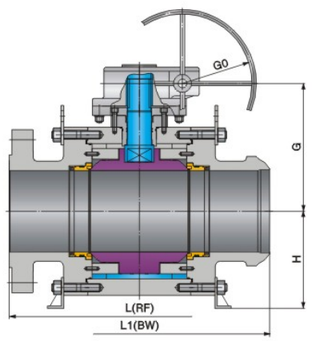

Worm Gear Operated

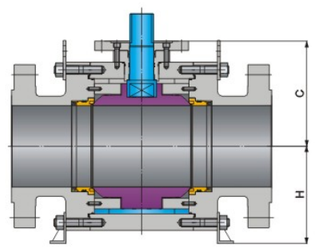

Bare Stem with Mounting Pad

Main External Dimensions

PN150/PN160/Class900

Full Bore **Unit: mm**

DN	NPS	L (RF)	L1 (BW)	L2 (RTJ)	MA		GA		C	H	WT(Kg)	Torque (N·M)
					M	M0	G	G0				
50	2	368	368	371	148	650	--	--	105	110	50	228
65	2 1/2	419	419	422	191	650	--	--	135	118	61	263
80	3	381	381	384	216	800	255	400	165	130	76	512
100	4	457	457	460	--	--	285	400	210	167	150	946
150	6	610	610	613	--	--	370	400	260	251	367	1784
200	8	737	737	740	--	--	400	500	295	280	600	4116
250	10	838	838	841	--	--	450	500	345	340	1027	5910
300	12	965	965	968	--	--	500	500	384	390	1558	10137
350	14	1029	1029	1038	--	--	520	500	400	442	1765	14141
400	16	1130	1130	1140	--	--	550	600	440	490	2157	18866
450	18	1219	1219	1232	--	--	600	600	482	500	2860	22400
500	20	1321	1321	1334	--	--	630	600	530	500	4220	28544
550	22	--	--	--	--	--	--	--	--	--	--	--
600	24	1549	1549	1568	--	--	810	700	615	630	7150	43276
650	26	1651	1651	1673	--	--	850	700	650	650	8040	48580
700	28	1753	1753	1775	--	--	900	800	670	710	10840	60000
750	30	1880	1880	1902	--	--	980	1000	725	780	12210	76000
800	32	2032	2032	2054	--	--	1240	1000	785	810	14992	90195
850	34	2159	2159	2188	--	--	1275	1000	805	850	17230	100460
900	36	2286	2286	2315	--	--	1310	1000	845	900	19920	131875
1000	40	2283	2100	2311	--	--	1420	1000	955	980	24251	--
1050	42	2438	2200	2461	--	--	1455	1000	986	990	28660	--
1200	48	2769	2300	2797	--	--	1530	1000	1150	1199	36156	--

Forged Steel Trunnion Ball Valve

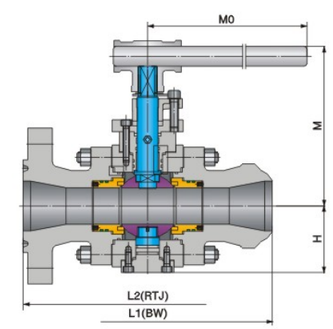

Lever–Operated

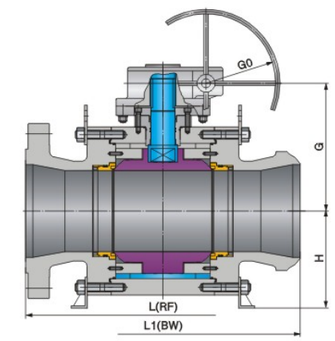

Worm Gear Operated

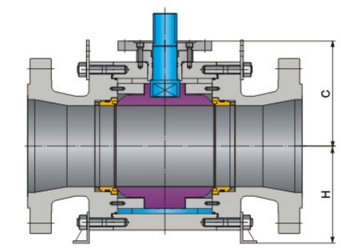

Bare Stem with Mounting Pad

Main External Dimensions

PN150/PN160/Class900

Reduced Bore **Unit: mm**

DN×DN'	NPS×NPS'	L (RF)	L1 (BW)	L2 (RTJ)	MA		GA		C	H	WT(Kg)	Torque (N·M)
					M	M0	G	G0				
50×40	2×1 1/2	368	368	371	128	500	--	--	105	110	49	163
80×50	3×2	381	381	384	148	650	--	--	105	110	59	228
100×80	4×3	457	457	460	216	800	255	400	165	130	97	512
150×100	6×4	610	610	613	--	--	285	400	210	167	249	946
200×150	8×6	737	737	740	--	--	370	400	260	251	447	1784
250×200	10×8	838	838	841	--	--	400	500	295	280	700	4116
300×250	12×10	965	965	968	--	--	450	500	345	340	1148	5910
350×250	14×10	1029	1029	1038	--	--	450	500	345	340	1235	5910
350×300	14×12	1029	1029	1038	--	--	500	500	384	390	1643	10137
400×300	16×12	1130	1130	1140	--	--	500	500	384	390	1738	10137
400×350	16×14	1130	1130	1140	--	--	520	500	400	442	1829	14141
450×350	18×14	1219	1219	1232	--	--	520	500	400	442	1920	14141
450×400	18×16	1219	1219	1232	--	--	550	600	440	490	2437	18866
500×400	20×16	1321	1321	1334	--	--	550	600	440	490	2887	18866
500×450	20×18	1321	1321	1334	--	--	600	600	482	500	3260	22400
600×500	24×20	1549	1549	1568	--	--	630	600	530	500	5400	28544
750×600	30×24	1880	1880	1902	--	--	810	700	615	630	8750	43276
900×750	36×30	2286	2286	2315	--	--	980	1000	725	780	15420	76000

Forged Steel Trunnion Ball Valve

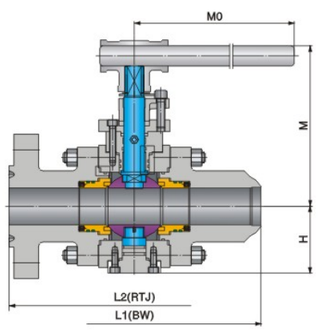

Lever–Operated

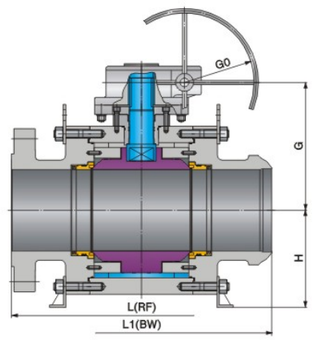

Worm Gear Operated

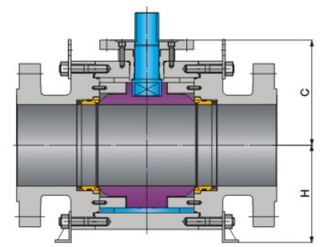

Bare Stem with Mounting Pad

Main External Dimensions

PN250/PN260/Class1500

Full Bore — Unit: mm

DN	NPS	L (RF)	L1 (BW)	L2 (RTJ)	MA		GA		C	H	WT(Kg)	Torque (N·M)
					M	M0	G	G0				
50	2	368	368	371	175	650	--	--	105	105	53	390
65	2 1/2	419	419	422	191	650	--	--	138	120	63	448
80	3	470	470	473	216	750	255	500	165	130	98	931
100	4	546	546	549	--	--	285	500	215	167	200	1524
150	6	705	705	711	--	--	460	500	260	270	485	2934
200	8	832	832	841	--	--	520	500	300	300	827	7215
250	10	991	991	1000	--	--	640	500	365	360	1507	10990
300	12	1130	1130	1146	--	--	720	500	420	423	2272	16103
350	14	1257	1257	1276	--	--	760	500	440	460	2880	24518
400	16	1384	1384	1407	--	--	820	600	480	510	4120	29630
450	18	1537	1537	1559	--	--	880	600	550	600	6260	34392
500	20	1664	1664	1686	--	--	900	700	620	650	9120	40918
550	22	--	--	--	--	--	--	--	--	--	--	--
600	24	--	--	1972	--	--	920	800	700	720	14320	65351

Forged Steel Trunnion Ball Valve

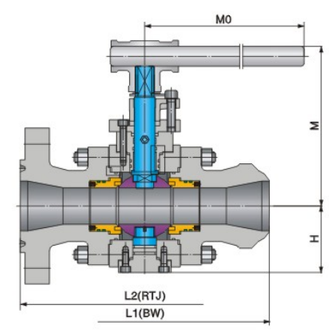

Lever–Operated

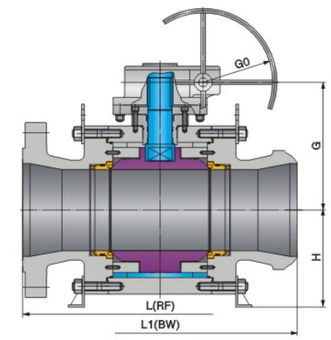

Worm Gear Operated

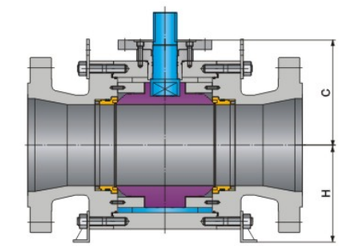

Bare Stem with Mounting Pad

Main External Dimensions

PN250/PN260/Class1500

Reduced Bore — Unit: mm

DN×DN'	NPS×NPS'	L (RF)	L1 (BW)	L2 (RTJ)	MA		GA		C	H	WT(Kg)	Torque (N·M)
					M	M0	G	G0				
50×40	2×1 1/2	368	368	371	160	600	--	--	105	105	45	181
80×50	3×2	470	470	473	175	650	--	--	105	105	66	390
100×80	4×3	546	546	549	216	750	255	500	165	130	126	931
150×100	6×4	705	705	711	--	--	285	500	215	167	290	1524
200×150	8×6	832	832	841	--	--	460	500	260	270	575	2934
250×200	10×8	991	991	1000	--	--	520	500	300	300	1032	7215
300×250	12×10	1130	1130	1146	--	--	640	500	365	360	1767	10990
350×250	14×10	1257	1257	1276	--	--	640	500	365	360	2152	10990
350×300	14×12	1257	1257	1276	--	--	720	500	420	423	2537	16103
400×300	16×12	1384	1384	1407	--	--	720	500	420	423	2807	16103
400×350	16×14	1384	1384	1407	--	--	760	500	440	460	3280	24518
450×350	18×14	1537	1537	1559	--	--	760	500	440	460	4050	24518
450×400	18×16	1537	1537	1559	--	--	820	600	480	510	4980	29630
500×400	20×16	1664	1664	1686	--	--	820	600	480	510	5350	29630
500×450	20×18	1664	1664	1686	--	--	880	600	550	600	7540	34392
600×500	24×20	--	--	1972	--	--	900	700	620	650	11050	40918

Forged Steel Trunnion Ball Valve

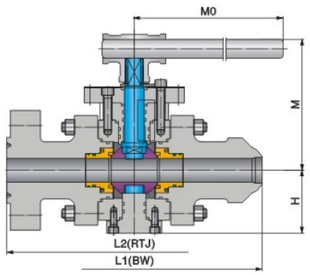

Lever–Operated

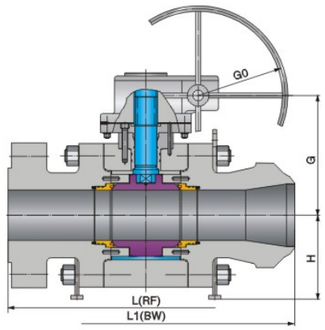

Worm Gear Operated

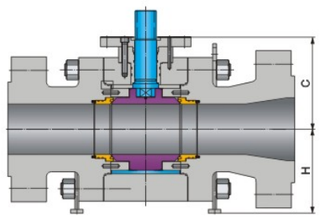

Bare Stem with Mounting Pad

Main External Dimensions

PN420/Class2500

Full Bore — Unit: mm

DN	NPS	L (RF)	L1 (BW)	L2 (RTJ)	MA		GA		C	H	WT(Kg)	Torque (N·M)
					M	M0	G	G0				
50	2	451	451	454	168	800	170	350	120	125	90	589
65	$2^1/_2$	508	508	514	190	1000	210	450	140	160	152	736
80	3	578	578	584	205	1000	250	500	175	200	200	1577
100	4	673	673	683	--	--	290	500	225	230	385	1965
150	6	914	914	927	--	--	340	600	260	250	778	5501
200	8	1022	1022	1038	--	--	470	600	380	340	1352	11786
250	10	1270	1270	1292	--	--	490	700	450	425	2537	13222
300	12	1422	1422	1445	--	--	615	800	515	480	3667	20075

Reduced Bore — Unit: mm

DN×DN'	NPS×NPS'	L (RF)	L1 (BW)	L2 (RTJ)	MA		GA		C	H	WT(Kg)	Torque (N·M)
					M	M0	G	G0				
50×40	$2\times1^1/_2$	451	451	454	155	800	--	--	115	105	63	320
80×50	3×2	578	578	584	168	800	170	350	120	125	158	589
100×80	4×3	673	673	683	205	1000	250	500	175	200	270	1577
150×100	6×4	914	914	927	--	--	290	500	225	230	517	1965
200×150	8×6	1022	1022	1038	--	--	340	600	260	250	1098	5501
250×200	10×8	1270	1270	1292	--	--	470	600	380	340	1667	11786
300×250	12×10	1422	1422	1445	--	--	490	700	450	425	2867	13222

Top Entry Floating Ball Valve

Technical Specifications

Design Basis		GB		API		ASME
Design Standard		GB/T 12237	GB/T 19672	API 608	API 6D	ASME B16.34
Face–to–Face		GB/T 12221	GB/T 19672	ASME B16.10	API 6D	ASME B16.10
Connection End	Flanged	GB/T 9113		ASME B16.5		
	Butt–Welding	GB/T 12224		ASME B16.25		
Material		NACE MR0175				
Test and Inspection		JB/T 9092	GB/T 19672	API 598	API 6D	ASME B16.34
Fire Test		JB/T 6899		API 6FA/API607		

The dimension of welded end connection can be designed and manufactured according to the buyers's request.

Top Entry
Floating Ball Valve

Main Parts and Materials

Conventional Type

Part Name	Carbon Steel		Low Temp. Steel		Stainless Steel	
	GB	ASTM	GB	ASTM	GB	ASTM
Body	WCB	A216-WCB	LCB LCC	A352-LCB A352-LCC	CF8 CF8M	A351-CF8 A351-CF8M
Bolt/Nut	35CrMo 45	A193-B7 A194-2H	304 304	A320-L7 A194-4	304 304	A193-B8 A194-8
Ball	25+ENP	A105+ENP	0Cr18Ni9	A350-LF2+ENP	0Cr18Ni9 00Cr17Ni12Mo2	A182-F304 A182-F316
Stem	1Cr13 2Cr13	A276-410 A276-420	304	A350-LF2 A276-304	304 316	A276-304 A276-316
Seat	Standard:PTFE OR NYLON Special:PEEK OR DEVLON		Standard:PTFE OR NYLON Special:PEEK OR DEVLON		Standard:PTFE OR NYLON Special:PEEK OR DEVLON	
O-Ring	NBR OR VITON		NBR OR VITON		VITON	
Gasket	Graphite+ Stainless steel		Graphite+ Stainless steel		Graphite+ Stainless steel	

Main Parts and Materials

Sulfur-resisting type

Part Name	Carbon Steel		Low Temp. Steel		Stainless Steel	
	GB	ASTM	GB	ASTM	GB	ASTM
Body	WCB	A216-WCB	LCB LCC	A352-LCB A352-LCC	CF8 CF8M	A351-CF8 A351-CF8M
Bolt/Nut	35CrMo 45	A193-B7 A194-2H	304 304	A320-L7 A194-4	304 304	A193-B8 A194-8
Ball	25+ENP	A105+ENP	0Cr18Ni9	A350-LF2+ENP	0Cr18Ni9 00Cr17Ni12Mo2	A182-F304 A182-F316
Stem	17-4PH		For use at low temperatures resilient steels.		304 316	A276-304 A276-316
Seat	Standard:PTFE OR NYLON Special:PEEK OR DEVLON		Standard:PTFE OR NYLON Special:PEEK OR DEVLON		Standard:PTFE OR NYLON Special:PEEK OR DEVLON	
O-Ring	NBR OR VITON		NBR OR VITON		VITON	
Gasket	Graphite+ Stainless steel		Graphite+ Stainless steel		Graphite+ Stainless steel	

Top Entry
Floating Ball Valve

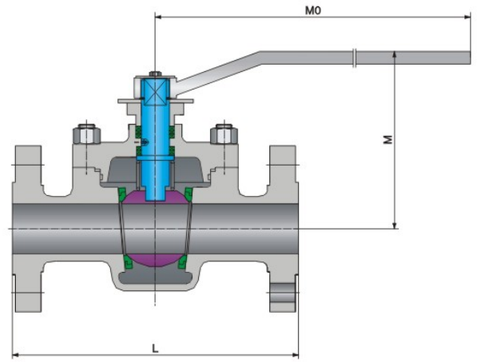

Lever-Operated

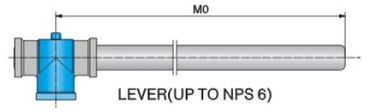

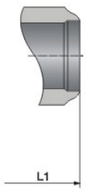

Welding end BW

Reduced runoff Road RB

Main External Dimensions

PN16/PN20/Class150

Full Bore — Unit: mm

DN	NPS	L (RF)	L1 (BW)	MA		WT(Kg)
				M	M0	
15	1/2	165	165	85	140	5
20	3/4	191	191	90	140	8
25	1	216	216	99	150	10
40	$1^1/_2$	241	241	126	200	16
50	2	292	292	140	250	25
65	$2^1/_2$	330	330	165	300	40
80	3	356	356	178	350	70
100	4	432	432	230	500	85
150	6	559	559	310	800	190
200	8	660	660	350	1000	410
250	10	787	787	400	1000	680

Reduced Bore — Unit: mm

DN×DN'	NPS×NPS'	L (RF)	L1 (BW)	MA		WT(Kg)
				M	M0	
20×15	3/4×1/2	117	152	85	140	5
25×20	1×3/4	127	165	90	140	6.5
40×25	$1^1/_2$×1	165	190	99	150	9.5
50×40	2×$1^1/_2$	178	216	126	200	13
80×50	3×2	203	283	140	250	22
100×80	4×3	229	305	178	350	48
150×100	6×4	394	457	230	500	70
200×150	8×6	457	521	310	800	190
250×200	10×8	533	559	350	1000	230

Top Entry
Floating Ball Valve

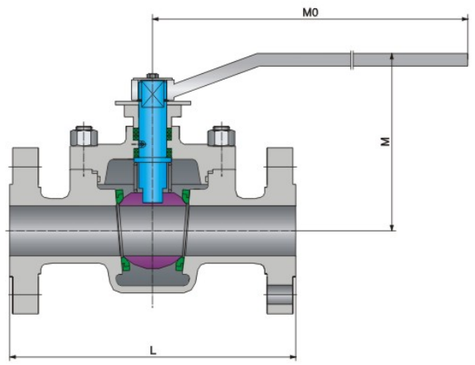

Lever–Operated

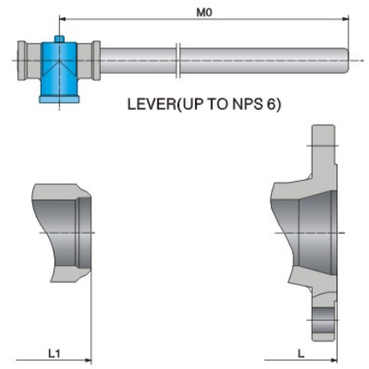

Welding end BW

Reduced runoff Road RB

Main External Dimensions

PN25/PN40/Class300

Full Bore — Unit: mm

DN	NPS	L (RF)	L1 (BW)	MA		WT(Kg)
				M	M0	
15	1/2	165	165	85	140	6
20	3/4	191	191	90	140	9.5
25	1	216	216	99	150	11
40	$1^1/_2$	241	241	126	200	19
50	2	292	292	140	250	29
65	$2^1/_2$	330	330	165	300	45
80	3	356	356	178	350	75
100	4	432	432	230	500	95
150	6	559	559	310	800	205
200	8	660	660	350	1000	445

Reduced Bore — Unit: mm

DN × DN'	NPS × NPS'	L (RF)	L1 (BW)	MA		WT(Kg)
				M	M0	
20×15	3/4×1/2	152	152	85	140	5.5
25×20	1×3/4	165	165	90	140	7.5
40×25	$1^1/_2$×1	190	190	99	150	13
50×40	2×$1^1/_2$	216	216	126	200	15
80×50	3×2	283	283	140	250	34
100×80	4×3	305	305	178	350	57
150×100	6×4	457	457	230	500	83
200×150	8×6	502	521	310	800	230

Top Entry
Floating Ball Valve

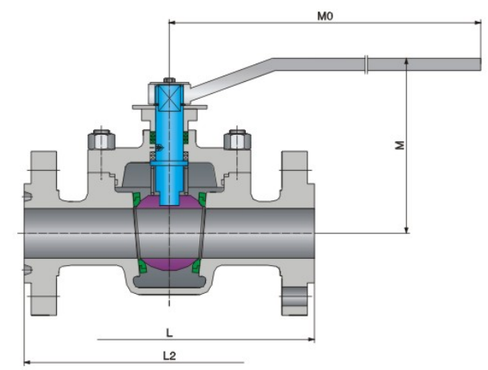

Lever–Operated

Catenin end RTJ

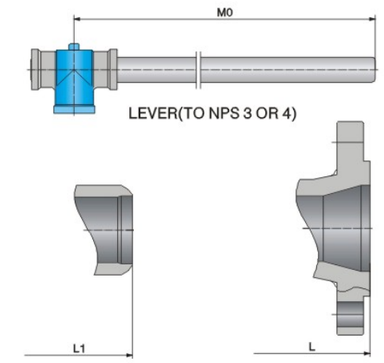

Welding end BW

Reduced runoff Road RB

Main External Dimensions

PN100/PN110/Class 600

Full Bore — Unit: mm

DN	NPS	L (RF)	L1 (BW)	L2 (RTJ)	MA		WT(Kg)
					M	M0	
15	1/2	165	165	163.5	79	140	7
20	3/4	191	191	191	83	140	10
25	1	216	216	216	114	200	12
40	$1^1/_2$	241	241	241	125	250	22
50	2	292	292	295	156	300	31
65	$2^1/_2$	330	330	333	172	350	52
80	3	356	356	359	220	500	80
100	4	432	432	435	250	650	105

Reduced Bore — Unit: mm

DN × DN'	NPS × NPS'	L (RF)	L1 (BW)	L2 (RTJ)	MA		WT(Kg)
					M	M0	
20×15	3/4×1/2	191	191	191	79	140	6
25×20	1×3/4	216	216	216	83	140	9
40×25	$1^1/_2$×1	241	241	241	114	200	15
50×40	2×$1^1/_2$	292	292	295	125	250	19
80×50	3×2	356	356	359	156	300	48
100×80	4×3	432	432	435	220	500	72
150×100	6×4	559	559	562	250	650	110

Top Entry Trunnion Ball Valve

Technical Specifications

Design Basis		GB		API		ASME
Design Standard		GB/T 12237	GB/T 19672	API 608	API 6D	ASME B16.34
Face–to–Face		GB/T 12221	GB/T 19672	ASME B16.10	API 6D	ASME B16.10
Connection End	Flanged	GB/T 9113		ASME B16.5/MSS SP–44/ASME B16.47[a]		
	Butt–Welding	GB/T 12224		ASME B16.25		
Material		NACE MR0175				
Test and Inspection		JB/T 9092	GB/T 19672	API 598	API 6D	ASME B16.34
Fire Test		JB/T 6899		API 6FA/API607		

The dimension of welded end connection can be designed and manufactured according to the buyers's request.

a.MSS SP–44 for size 22.
ASME B16.47 Series A for size 26 & over.

Top Entry Trunnion Ball Valve

Main Parts and Materials

Conventional Type

Part Name	Carbon Steel		Low Temp. Steel		Stainless Steel	
	GB	ASTM	GB	ASTM	GB	ASTM
Body	WCB	A216–WCB	LCB LCC	A352–LCB A352–LCC	CF8 CF8M	A351–CF8 A351–CF8M
Bolt/Nut	35CrMo 45	A193–B7 A194–2H	304 304	A320–L7 A194–4	304 304	A193–B8 A194–8
Ball	25+ENP	A105+ENP	0Cr18Ni9	A350–LF2+ENP	0Cr18Ni9 00Cr17Ni12Mo2	A182–F304 A182–F316
Stem	1Cr13 2Cr13	A276–410 A276–420	304	A350–LF2 A276–304	304 316	A276–304 A276–316
Seat	25+ENP	A105+ENP	304	A350 LF2+ENP	0Cr18Ni9 00Cr17Ni12Mo2	A182–F304 A182–F316
Seat insert	Standard:PTFE/NYLON Special:PEEK/DEVLON/VITON		Standard:PTFE/NYLON Special:PEEK/DEVLON/VITON		Standard:PTFE/NYLON Special:PEEK/DEVLON/VITON	
O–Ring	NBR OR VITON		NBR OR VITON		VITON	
Gasket	Graphite+ Stainless steel		Graphite+ Stainless steel		Graphite+ Stainless steel	

Main Parts and Materials

Sulfur-resisting type

Part Name	Carbon Steel		Low Temp. Steel		Stainless Steel	
	GB	ASTM	GB	ASTM	GB	ASTM
Body	WCB	A216–WCB	LCB LCC	A352–LCB A352–LCC	CF8 CF8M	A351–CF8 A351–CF8M
Bolt/Nut	35CrMo 45	A193–B7M A194–2H	304 304	A320–L7 A194–4	304 304	A193–B8 A194–8
Ball	25+ENP	A105+ENP	0Cr18Ni9	A350–LF2+ENP	0Cr18Ni9 00Cr17Ni12Mo2	A182–F304 A182–F316
Stem	17–4PH		For use at low temperatures resilient steels.		304 316	A276–304 A276–316
Seat	25+ENP	A105+ENP	304	A350 LF2+ENP	0Cr18Ni9 00Cr17Ni12Mo2	A182–F304 A182–F316
Seat insert	Standard:PTFE/NYLON Special:PEEK/DEVLON/VITON		Standard:PTFE/NYLON Special:PEEK/DEVLON/VITON		Standard:PTFE/NYLON Special:PEEK/DEVLON/VITON	
O–Ring	NBR OR VITON		NBR OR VITON		VITON	
Gasket	Graphite+ Stainless steel		Graphite+ Stainless steel		Graphite+ Stainless steel	

Top Entry
Trunnion Ball Valve

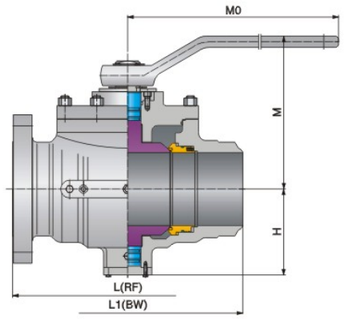

Lever–Operated

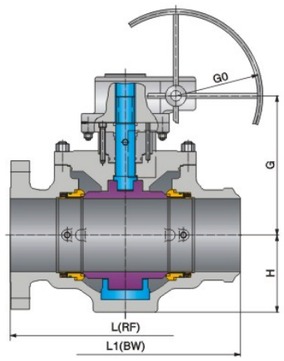

Worm Gear Operated

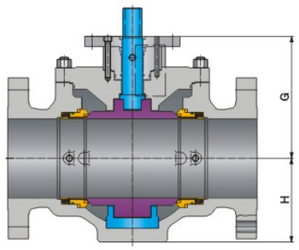

Bare Stem with Mounting Pad

Main External Dimensions

PN16/PN20/Class150

Full Bore — **Unit: mm**

DN	NPS	L (RF)	L1 (BW)	L2 (RTJ)	MA		GA		C	H	WT(Kg)	Torque (N·M)
					M	M0	G	G0				
40	1 1/2	260	260	264	206	300	--	--	145	63	28	40
50	2	292	292	295	231	300	--	--	170	78	40	57
65	2 1/2	330	330	333	245	400	--	--	182	90	48	71
80	3	356	356	359	273	450	--	--	212	100	65	95
100	4	432	432	435	297	500	--	--	236	120	110	192
150	6	559	559	562	351	800	338	300	271	162	210	485
200	8	660	660	664	388	1000	375	400	308	207	375	832
250	10	787	787	791	--	--	415	400	348	244	462	1105
300	12	838	838	841	--	--	452	500	385	290	660	1655
350	14	889	889	892	--	--	473	500	398	370	930	2695
400	16	991	991	994	--	--	498	600	423	405	1354	3164
450	18	1092	1092	1095	--	--	545	600	470	445	2100	3793
500	20	1194	1194	1200	--	--	603	600	528	540	2680	5500
550	22	1295	1295	1305	--	--	688	600	578	550	3400	6650
600	24	1397	1397	1407	--	--	742	700	630	595	4180	7529
650	26	1448	1448	1461	--	--	750	700	635	640	4850	8693
700	28	1549	1549	1562	--	--	797	700	685	680	5850	10770
750	30	1651	1651	1664	--	--	835	700	720	745	6400	12365
800	32	1778	1778	1794	--	--	896	700	760	770	7850	14070
850	34	1930	1930	1946	--	--	926	700	790	800	8600	21148
900	36	2083	2083	2099	--	--	950	700	810	820	9850	22987
1000	40	2337	2337	2366	--	--	1036	700	900	850	14500	26059
1050	42	2439	2439	2467	--	--	1066	800	930	890	16150	28149
1200	48	2540	2540	2540	--	--	1227	800	1067	970	25000	42776
1400	56	2949	2949	2949	--	--	1420	800	1220	1120	38000	65654
1500	60	--	--	--	--	--	1520	1000	1300	1190	44000	85654

Top Entry
Trunnion Ball Valve

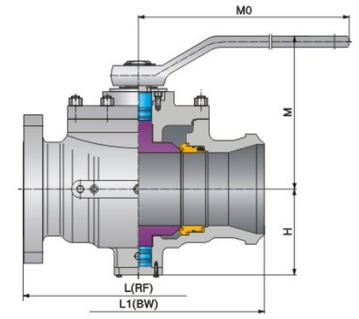

Lever–Operated

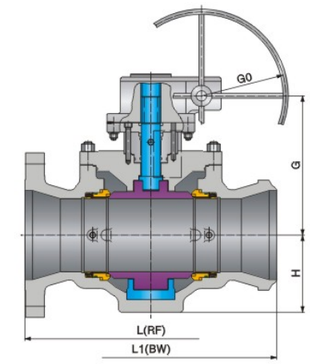

Worm Gear Operated

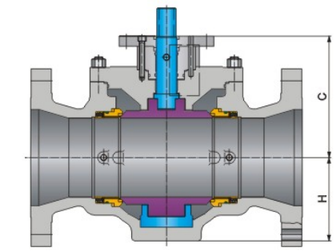

Bare Stem with Mounting Pad

Main External Dimensions

PN16/PN20/Class150

Reduced Bore — **Unit: mm**

DN×DN'	NPS×NPS'	L (RF)	L1 (BW)	L2 (RTJ)	MA		GA		C	H	WT(Kg)	Torque (N·M)
					M	M0	G	G0				
50×40	2×1 1/2	292	292	295	206	300	--	--	145	63	30	40
80×50	3×2	356	356	359	231	300	--	--	170	78	50	57
100×80	4×3	432	432	435	273	450	--	--	212	100	80	95
150×100	6×4	559	559	562	297	500	--	--	236	120	130	192
200×150	8×6	660	660	664	351	800	338	300	271	162	232	485
250×200	10×8	787	787	791	388	1000	375	400	308	207	422	832
300×250	12×10	838	838	841	--	--	415	400	348	244	495	1105
350×250	14×10	889	889	892	--	--	415	400	348	244	550	1105
400×300	16×12	991	991	994	--	--	452	500	385	290	800	1655
450×350	18×14	1092	1092	1095	--	--	473	500	398	370	1000	2695
500×400	20×16	1194	1194	1200	--	--	498	600	423	405	1950	3164
600×500	24×20	1397	1397	1407	--	--	603	600	528	540	3160	5500
750×600	30×24	1651	1651	1664	--	--	742	700	630	595	4800	7529
900×750	36×30	2083	2083	2099	--	--	835	700	720	745	7860	12365

Top Entry
Trunnion Ball Valve

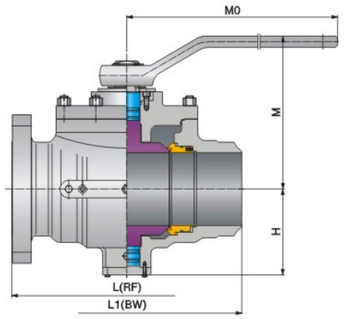

Lever–Operated

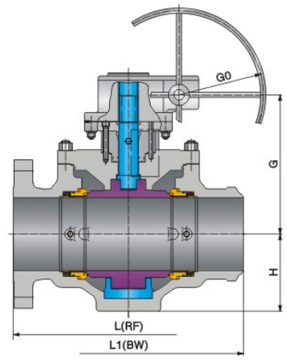

Worm Gear Operated

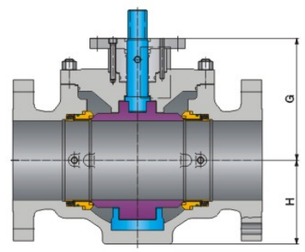

Bare Stem with Mounting Pad

Main External Dimensions

PN25/PN40/PN50/Class300

Full Bore — **Unit: mm**

DN	NPS	L (RF)	L1 (BW)	L2 (RTJ)	MA		GA		C	H	WT(Kg)	Torque (N·M)
					M	M0	G	G0				
40	1 1/2	260	260	264	206	300	--	--	145	63	30	50
50	2	292	292	295	231	300	--	--	170	78	40	99
65	2 1/2	330	330	333	245	400	--	--	182	90	47	124
80	3	356	356	359	273	450	--	--	212	100	65	212
100	4	432	432	435	297	500	--	--	236	120	125	335
150	6	559	559	562	351	800	338	300	271	162	277	544
200	8	660	660	664	388	1000	375	400	308	207	407	1250
250	10	787	787	791	--	--	423	400	348	244	484	1736
300	12	838	838	841	--	--	460	500	385	290	664	2388
350	14	889	889	892	--	--	481	500	398	370	1060	3224
400	16	991	991	994	--	--	515	600	436	405	1450	5139
450	18	1092	1092	1095	--	--	555	600	478	445	2200	7970
500	20	1194	1194	1200	--	--	648	600	536	537	3400	10570
550	22	1295	1295	1305	--	--	712	600	600	550	1950	12140
600	24	1397	1397	1407	--	--	758	700	645	595	4400	17240
650	26	1448	1448	1461	--	--	786	700	650	640	5410	20340
700	28	1549	1549	1562	--	--	845	700	708	680	6640	25069
750	30	1651	1651	1664	--	--	856	700	720	745	7780	27640
800	32	1778	1778	1794	--	--	921	700	785	770	9550	29550
850	34	1930	1930	1946	--	--	951	700	815	800	11230	31558
900	36	2083	2083	2099	--	--	1008	700	848	800	13180	35170
1000	40	2337	2337	2366	--	--	1095	700	935	850	17310	39115
1050	42	2439	2439	2467	--	--	1125	800	965	890	19600	42414
1200	48	2540	2540	2540	--	--	1330	800	1130	970	26000	71868
1400	56	2949	2949	2949	--	--	1520	1000	1310	1120	45000	108550

Top Entry
Trunnion Ball Valve

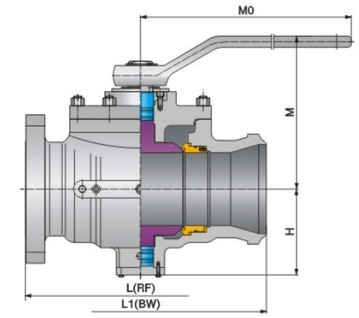

Lever–Operated

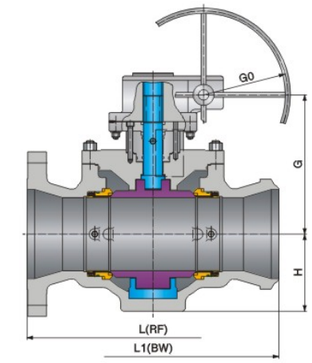

Worm Gear Operated

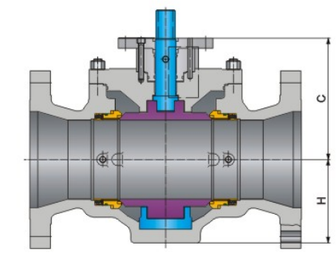

Bare Stem with Mounting Pad

Main External Dimensions

PN25/PN40/PN50/Class300

Reduced Bore — **Unit: mm**

DN×DN'	NPS×NPS'	L (RF)	L1 (BW)	L2 (RTJ)	MA		GA		C	H	WT(Kg)	Torque (N·M)
					M	M0	G	G0				
50×40	2×1 1/2	292	292	295	206	300	--	--	145	63	32	50
80×50	3×2	356	356	359	231	300	--	--	170	78	49	99
100×80	4×3	432	432	435	273	450	--	--	212	100	85	212
150×100	6×4	559	559	562	297	500	--	--	236	120	145	335
200×150	8×6	660	660	664	351	800	338	300	271	162	282	544
250×200	10×8	787	787	791	388	1000	375	400	308	207	438	1250
300×250	12×10	838	838	841	--	--	423	400	348	244	546	1736
350×250	14×10	889	889	892	--	--	423	400	348	244	648	1736
400×300	16×12	991	991	994	--	--	460	500	385	290	970	2388
450×350	18×14	1092	1092	1095	--	--	481	500	398	370	1450	3224
500×400	20×16	1194	1194	1200	--	--	515	600	436	405	2240	5139
600×500	24×20	1397	1397	1407	--	--	648	600	536	537	3530	10570
750×600	30×24	1651	1651	1664	--	--	758	700	645	595	5100	17240
900×750	36×30	2083	2083	2099	--	--	856	700	720	745	8800	27640

Top Entry
Trunnion Ball Valve

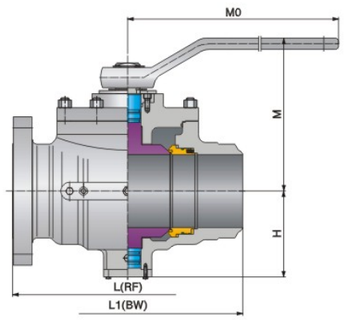

Lever–Operated

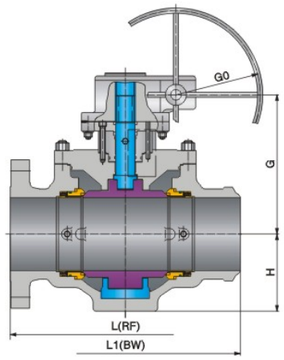

Worm Gear Operated

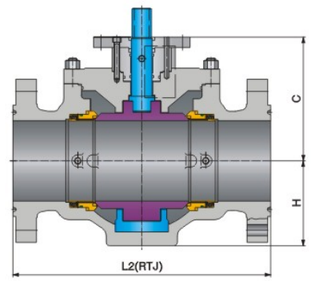

Bare Stem with Mounting Pad

Main External Dimensions

PN63/PN64/Class400

Full Bore — **Unit: mm**

DN	NPS	L (RF)	L1 (BW)	L2 (RTJ)	MA		GA		C	H	WT(Kg)	Torque (N·M)
					M	M0	G	G0				
40	$1^1/_2$	260	260	264	206	400	--	--	145	63	32	98
50	2	292	292	295	231	500	--	--	170	78	42	124
65	$2^1/_2$	330	330	333	243	600	--	--	182	90	55	155
80	3	356	356	359	273	600	--	--	212	100	70	265
100	4	432	432	435	297	800	--	--	236	120	132	467
150	6	559	559	562	376	1000	338	400	271	162	237	650
200	8	660	660	664	--	--	383	400	308	207	424	1806
250	10	787	787	791	--	--	433	500	348	245	592	2638
300	12	838	838	841	--	--	460	500	385	290	790	2929
350	14	889	889	892	--	--	488	500	413	370	1150	3971
400	16	991	991	994	--	--	533	500	458	405	1510	6307
450	18	1092	1092	1095	--	--	600	600	525	450	2350	9165
500	20	1194	1194	1200	--	--	645	600	570	530	3590	12155
550	22	1295	1295	1305	--	--	680	600	605	560	4300	15175
600	24	1397	1397	1407	--	--	799	600	663	595	4680	21550
650	26	1448	1448	1461	--	--	815	700	678	650	5710	25426
700	28	1549	1549	1562	--	--	876	700	740	700	6970	31336
750	30	1651	1651	1664	--	--	936	800	800	800	8480	34550
800	32	1778	1778	1794	--	--	963	800	827	840	10230	36937
850	34	1930	1930	1946	--	--	986	800	850	870	11720	39447
900	36	2083	2083	2099	--	--	1035	800	875	930	13560	43962
1000	40	2337	2337	2366	--	--	1120	800	960	980	17700	48894
1050	42	2439	2439	2467	--	--	1200	800	1040	990	19980	50300
1200	48	2540	2540	2540	--	--	1355	1000	1145	1050	29000	80302
1400	56	2949	2949	2949	--	--	1540	1000	1230	1320	47000	129900

Top Entry
Trunnion Ball Valve

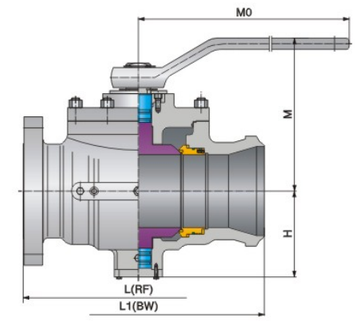

Lever–Operated

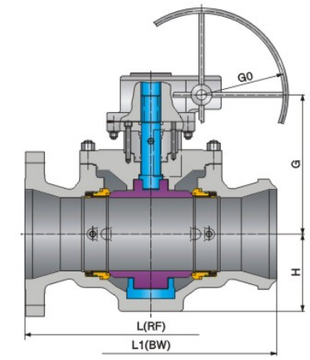

Worm Gear Operated

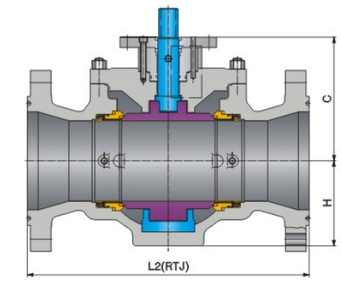

Bare Stem with Mounting Pad

Main External Dimensions

PN63/PN64/Class400

Reduced Bore — **Unit: mm**

DN×DN'	NPS×NPS'	L (RF)	L1 (BW)	L2 (RTJ)	MA		GA		C	H	WT(Kg)	Torque (N·M)
					M	M0	G	G0				
50×40	$2\times1^1/_2$	292	292	295	206	400	--	--	145	63	34	98
80×50	3×2	356	356	359	231	500	--	--	170	78	56	124
100×80	4×3	432	432	435	273	600	--	--	212	100	92	265
150×100	6×4	559	559	562	297	800	--	--	236	120	153	467
200×150	8×6	660	660	664	376	1000	338	400	271	162	309	650
250×200	10×8	787	787	791	--	--	383	400	308	207	506	1806
300×250	12×10	838	838	841	--	--	433	500	348	245	684	2638
350×250	14×10	889	889	892	--	--	433	500	348	245	850	2638
400×300	16×12	991	991	994	--	--	460	500	385	290	1020	2929
450×350	18×14	1092	1092	1095	--	--	488	500	413	370	1420	3971
500×400	20×16	1194	1194	1200	--	--	533	500	458	405	1880	6307
600×500	24×20	1397	1397	1407	--	--	645	600	570	530	4250	12155
750×600	30×24	1651	1651	1664	--	--	799	600	663	595	5880	21550
900×750	36×30	2083	2083	2099	--	--	936	800	800	800	9890	34550

Top Entry
Trunnion Ball Valve

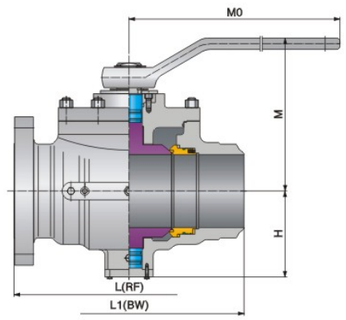

Lever–Operated

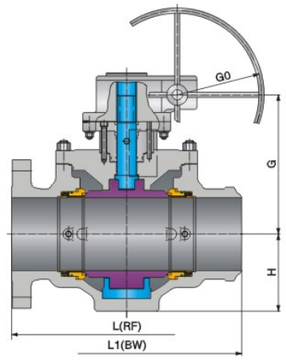

Worm Gear Operated

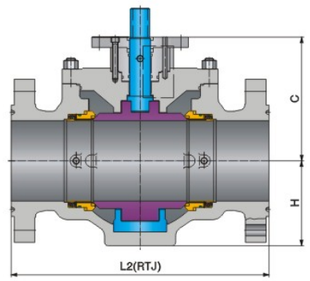

Bare Stem with Mounting Pad

Main External Dimensions

PN100/PN110/Class600

Full Bore — **Unit: mm**

DN	NPS	L (RF)	L1 (BW)	L2 (RTJ)	MA		GA		C	H	WT(Kg)	Torque (N·M)
					M	M0	G	G0				
40	1 1/2	260	260	264	206	400	--	--	145	63	35	130
50	2	292	292	295	231	500	--	--	170	78	50	168
65	2 1/2	330	330	333	243	600	--	--	182	90	59	210
80	3	356	356	359	273	700	--	--	212	100	75	360
100	4	432	432	435	316	800	303	400	236	120	155	572
150	6	559	559	562	--	--	338	400	271	162	290	912
200	8	660	660	664	--	--	383	400	308	207	480	2177
250	10	787	787	791	--	--	423	500	348	244	710	3093
300	12	838	838	841	--	--	460	500	385	290	1050	4282
350	14	889	889	892	--	--	500	500	425	365	1530	7458
400	16	991	991	994	--	--	605	500	493	430	1980	9310
450	18	1092	1092	1095	--	--	642	600	530	475	2460	14693
500	20	1194	1194	1200	--	--	700	600	588	540	3420	20011
550	22	1295	1295	1305	--	--	781	600	645	580	4030	24785
600	24	1397	1397	1407	--	--	815	600	679	620	5010	31226
650	26	1448	1448	1461	--	--	915	700	755	655	6340	35184
700	28	1549	1549	1562	--	--	930	700	770	730	8080	38987
750	30	1651	1651	1664	--	--	1030	800	870	800	9150	41832
800	32	1778	1778	1794	--	--	1055	800	895	830	10760	63865
850	34	1930	1930	1946	--	--	1105	800	945	870	12750	71720
900	36	2083	2083	2099	--	--	1180	1000	1020	900	15200	89020
1000	40	2337	2337	2366	--	--	1325	1000	1165	960	19210	109900
1050	42	2439	2439	2467	--	--	1405	1000	1205	1030	21850	121165
1200	48	2540	2540	2540	--	--	1507	1000	1307	1130	33000	145345
1400	56	2949	2949	2949	--	--	1710	1000	1510	1340	53000	169230

Top Entry
Trunnion Ball Valve

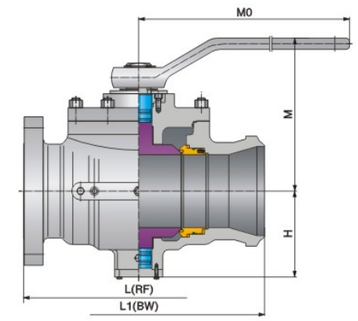

Lever–Operated

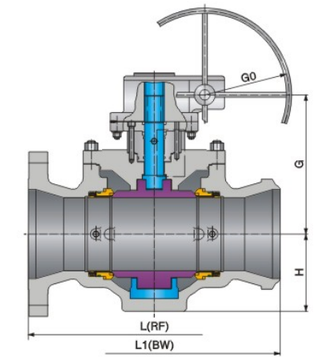

Worm Gear Operated

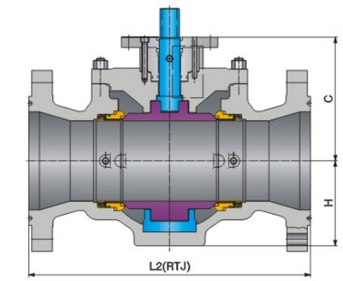

Bare Stem with Mounting Pad

Main External Dimensions

PN100/PN110/Class600

Reduced Bore — **Unit: mm**

DN×DN'	NPS×NPS'	L (RF)	L1 (BW)	L2 (RTJ)	MA		GA		C	H	WT(Kg)	Torque (N·M)
					M	M0	G	G0				
50×40	2×1 1/2	292	292	295	206	400	--	--	145	63	42	130
80×50	3×2	356	356	359	231	500	--	--	170	78	59	168
100×80	4×3	432	432	435	273	700	--	--	212	100	100	360
150×100	6×4	559	559	562	316	800	303	400	236	120	200	572
200×150	8×6	660	660	664	--	--	338	400	271	162	340	912
250×200	10×8	787	787	791	--	--	383	400	308	207	580	2177
300×250	12×10	838	838	841	--	--	423	500	348	244	850	3093
350×250	14×10	889	889	892	--	--	423	500	348	244	990	3093
400×300	16×12	991	991	994	--	--	460	500	385	290	1350	4282
450×350	18×14	1092	1092	1095	--	--	500	500	425	365	1650	7458
500×400	20×16	1194	1194	1200	--	--	605	500	493	430	2897	9310
600×500	24×20	1397	1397	1407	--	--	700	600	588	540	4160	20011
750×600	30×24	1651	1651	1664	--	--	815	600	679	620	5970	31226
900×750	36×30	2083	2083	2099	--	--	1030	800	870	800	10570	41832

Top Entry
Trunnion Ball Valve

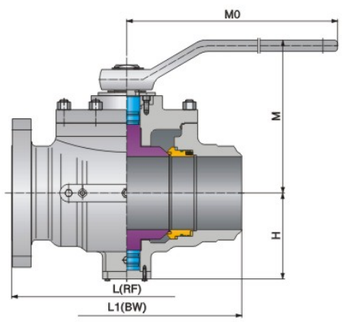

Lever–Operated

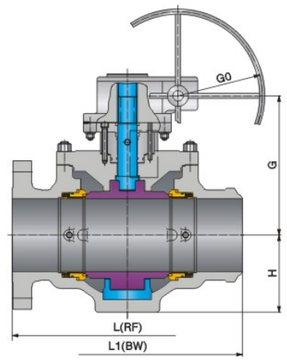

Worm Gear Operated

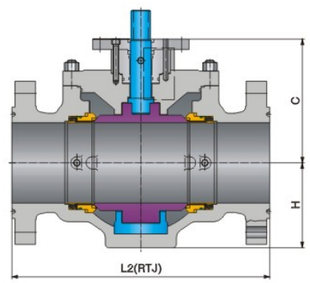

Bare Stem with Mounting Pad

Main External Dimensions

PN150/PN160/Class900

Full Bore — **Unit: mm**

DN	NPS	L (RF)	L1 (BW)	L2 (RTJ)	MA		GA		C	H	WT(Kg)	Torque (N·M)
					M	M0	G	G0				
40	$1^1/_2$	362	362	365	234	650	--	--	173	68	50	163
50	2	368	368	371	251	650	--	--	190	83	67	228
65	$2^1/_2$	419	419	422	278	650	--	--	202	98	75	263
80	3	381	381	384	305	800	--	--	225	110	90	512
100	4	457	457	460	--	--	335	400	268	127	185	946
150	6	610	610	613	--	--	396	400	321	170	380	1784
200	8	737	737	740	--	--	436	500	361	225	620	4116
250	10	838	838	841	--	--	445	500	368	260	880	5910
300	12	965	965	968	--	--	535	500	460	310	1360	10137
350	14	1029	1029	1038	--	--	590	500	478	395	1910	14141
400	16	1130	1130	1140	--	--	625	600	513	450	2790	18866
450	18	1219	1219	1232	--	--	702	600	590	505	3740	22400
500	20	1321	1321	1334	--	--	801	600	665	565	4600	28544
550	22	1423	1423	1439	--	--	910	700	750	620	6150	42427
600	24	1549	1549	1568	--	--	953	700	793	660	7850	43276
650	26	1651	1651	1673	--	--	995	700	835	685	10900	48580
700	28	1753	1753	1775	--	--	1053	800	893	740	12500	60000
750	30	1880	1880	1902	--	--	1110	800	950	830	14150	76000
800	32	2032	2032	2054	--	--	1160	1000	1000	880	17100	90195
850	34	2159	2159	2188	--	--	1203	1000	1043	930	18570	100460
900	36	2286	2286	2315	--	--	1260	1000	1096	960	21000	131875

Top Entry
Trunnion Ball Valve

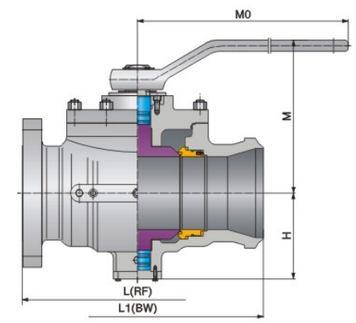

Lever–Operated

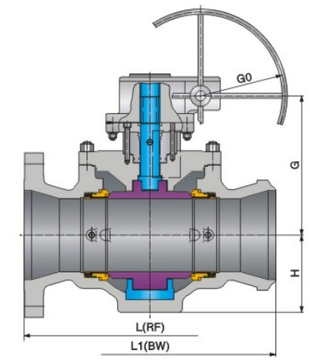

Worm Gear Operated

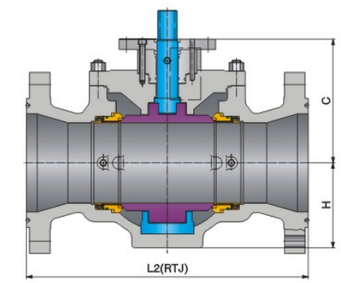

Bare Stem with Mounting Pad

Main External Dimensions

PN150/PN160/Class900

Reduced Bore — **Unit: mm**

DN×DN'	NPS×NPS'	L (RF)	L1 (BW)	L2 (RTJ)	MA		GA		C	H	WT(Kg)	Torque (N·M)
					M	M0	G	G0				
50×40	$2\times1^1/_2$	368	368	371	234	650	--	--	173	68	60	163
80×50	3×2	381	381	384	251	650	--	--	190	83	75	228
100×80	4×3	457	457	460	305	800	--	--	225	110	120	512
150×100	6×4	610	610	613	--	--	335	400	268	127	270	946
200×150	8×6	737	737	740	--	--	396	400	321	170	460	1784
250×200	10×8	838	838	841	--	--	436	500	361	225	740	4116
300×250	12×10	965	965	968	--	--	445	500	368	260	1120	5910
350×250	14×10	1029	1029	1038	--	--	445	500	368	260	1498	5910
400×300	16×12	1130	1130	1140	--	--	535	500	460	310	1803	10137
450×350	18×14	1219	1219	1232	--	--	590	500	478	395	2450	14141
500×400	20×16	1321	1321	1334	--	--	625	600	513	450	3950	18866
600×500	24×20	1549	1549	1568	--	--	801	600	665	565	5380	28544
750×600	30×24	1880	1880	1902	--	--	953	700	793	660	9045	43276
900×750	36×30	2286	2286	2315	--	--	1110	800	950	830	15270	76000

Top Entry
Trunnion Ball Valve

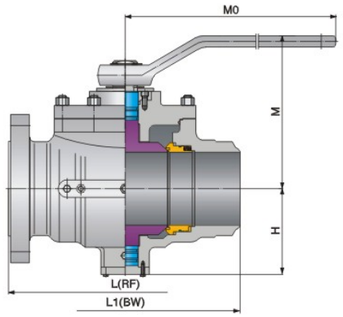

Lever–Operated

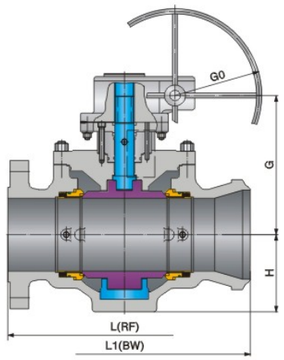

Worm Gear Operated

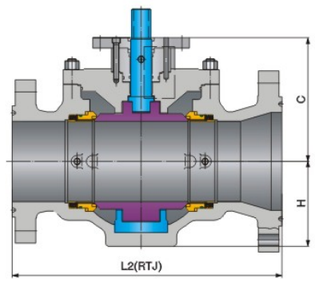

Bare Stem with Mounting Pad

Main External Dimensions

PN250/PN260/Class1500

Full Bore — Unit: mm

DN	NPS	L (RF)	L1 (BW)	L2 (RTJ)	MA		GA		C	H	WT(Kg)	Torque (N·M)
					M	M0	G	G0				
40	$1^1/_2$	362	362	365	234	700	--	--	173	68	50	--
50	2	368	368	371	251	800	--	--	190	83	67	390
65	$2^1/_2$	419	419	422	278	800	--	--	202	98	75	448
80	3	470	470	473	--	--	310	500	243	110	130	931
100	4	546	546	549	--	--	357	500	290	142	260	1524
150	6	705	705	711	--	--	436	500	361	188	560	2934
200	8	832	832	841	--	--	505	500	430	250	870	7215
250	10	991	991	1000	--	--	568	500	493	300	1380	10990
300	12	1130	1130	1146	--	--	663	500	553	350	2290	16103
350	14	1257	1257	1276	--	--	705	500	593	440	2890	24518
400	16	1384	1384	1407	--	--	755	600	643	460	4700	29630
450	18	1537	1537	1559	--	--	849	600	713	560	5985	34392
500	20	1664	1664	1686	--	--	941	700	805	615	7770	40918
550	22	1820	1820	1842	--	--	1005	800	845	695	10240	46075
600	24	--	--	1972	--	--	1038	800	878	720	12980	65351

Top Entry
Trunnion Ball Valve

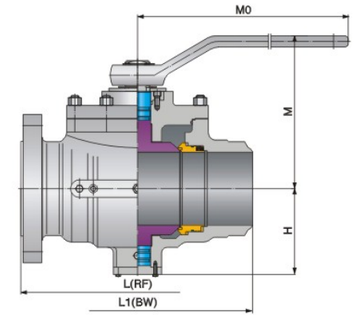

Lever–Operated

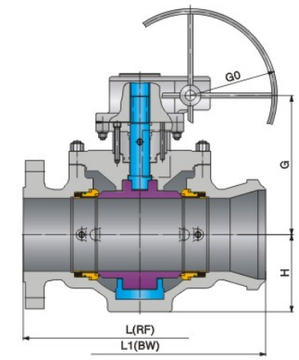

Worm Gear Operated

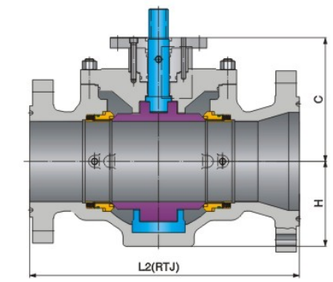

Bare Stem with Mounting Pad

Main External Dimensions

PN250/PN260/Class1500

Reduced Bore — Unit: mm

DN×DN'	NPS×NPS'	L (RF)	L1 (BW)	L2 (RTJ)	MA		GA		C	H	WT(Kg)	Torque (N·M)
					M	M0	G	G0				
50×40	$2\times1^1/_2$	368	368	371	234	700	--	--	173	68	60	181
80×50	3×2	470	470	473	251	800	--	--	190	83	83	390
100×80	4×3	546	546	549	--	--	310	500	243	110	180	931
150×100	6×4	705	705	711	--	--	357	500	290	142	370	1524
200×150	8×6	832	832	841	--	--	436	500	361	188	670	2934
250×200	10×8	991	991	1000	--	--	505	500	430	250	1080	7215
300×250	12×10	1130	1130	1146	--	--	568	500	493	300	1780	10990
350×250	14×10	1257	1257	1276	--	--	568	500	493	300	2152	10990
400×300	16×12	1384	1384	1407	--	--	663	500	553	350	3228	16103
450×350	18×14	1537	--	1559	--	--	705	500	593	440	4027	24518
500×400	20×16	1664	--	1686	--	--	755	600	643	460	5841	29630
600×500	24×20	--	--	1972	--	--	941	700	805	615	9810	40918

Top Entry Trunnion Ball Valve

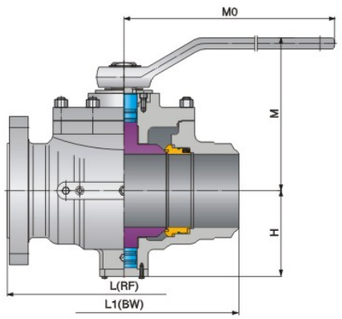

Lever–Operated

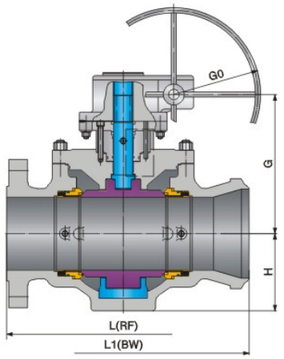

Worm Gear Operated

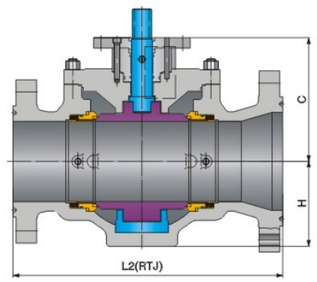

Bare Stem with Mounting Pad

Main External Dimensions

PN420/Class2500

Full Bore — **Unit: mm**

DN	NPS	L (RF)	L1 (BW)	L2 (RTJ)	MA		GA		C	H	WT(Kg)	Torque (N·M)
					M	M0	G	G0				
40	$1^1/_2$	384	384	387	269	700	--	--	208	75	68	320
50	2	451	451	454	291	800	--	--	230	95	122	589
65	$2^1/_2$	508	508	514	305	1000	--	--	258	105	167	736
80	3	578	578	584	--	--	349	500	282	128	250	1577
100	4	673	673	683	--	--	411	500	336	165	468	1965
150	6	914	914	927	--	--	487	600	375	245	950	5501
200	8	1022	1022	1038	--	--	572	600	460	315	1790	11786
250	10	1270	1270	1292	--	--	625	700	513	350	2650	13222
300	12	1422	1422	1445	--	--	695	700	583	410	4300	20075

Reduced Bore — **Unit: mm**

DN×DN'	NPS×NPS'	L (RF)	L1 (BW)	L2 (RTJ)	MA		GA		C	H	WT(Kg)	Torque (N·M)
					M	M0	G	G0				
50×40	$2\times1^1/_2$	451	451	454	269	700	--	--	208	75	82	320
80×50	3×2	578	578	584	291	800	--	--	230	95	175	589
100×80	4×3	673	673	683	--	--	349	500	282	128	320	1577
150×100	6×4	914	914	927	--	--	411	500	336	165	678	1965
200×150	8×6	1022	1022	1038	--	--	487	600	375	245	1126	5501
250×200	10×8	1270	1270	1292	--	--	572	600	460	315	2187	11786
300×250	12×10	1422	1422	1445	--	--	625	700	513	350	3340	13222

Hard Seal Ball Valve

Purpose

In general, the seat material of ball valve employs non–metal, such as PTFE. Limited by the seat material, ball valve can not be used in case of high temperature, the medium with solid and the ash disposal system. For this condition, with years of searching, we have developed the hard seal ball valve, including floating type and trunnion type, making the ball valve used extensive in petroleum, chemistry, metallurgy, polycrystalline silicon and eletric industry.

Structural Desing Characterostoc

Except for such features like wrong operation prevention , stemblow–out proof, mounting pad provited, the hard seal ball valves are made by possessing the following unique features.

Advanced Hardening Technology Employed For Ball And Seat

Hard seal ball valve design has been employed perfectly for the ball and seat , which has also adopted the advanced hardening technologies , such as ultro–sonic spray coating , nickel base spray welding , surface specially hardening , ste–lite spray welding , ceramic material with high strength and hardness , and so on . Surface hardness of the ball and seat may generally reach more than HRC60, Maximun is up to HRC74 , and application temperature of the material may be up to 540℃, Maximun is 980℃.

Combining strength of the material gets to more than . 10000PSI. Be sides , the surface materials posses also very good resistance properties of friction and impact . Hard seal ball valves made by are suitable for use in most critical working conditions.

Valve Stuck Under High Temperature Prevented

In the case of high temperature working condition , the valve seat and ball would easily get stuck due to heat expansion , and therefore the valve can not open . Hard seal ball valves made by employing the patented design of beveling spring . So , it is ensured that the valve would not get stuck and open and close easily in the case of high temperature condition.

Excellent Tightness Function

A unique technique has been employed for the ball grinding , which makes the ball surface reach extreme round and smooth by rotating the ball and grinding apparatus at different directions in space . The tightness function of the valve meets completely and exceeds the standard requirement.

Anti-atatic Structure

Hard seal ball valve with its body seat , ball , other metal parts , and so forth , closely contact with each other , having naturally for media static electricity passage . So , there is no need to provide special antistatic device .

Double-block And Bleed Function

Hard seal ball valve is in ge–neral of the front ball sealing structure. Actually , two seats of the metal to metal sealed trunnion ball valve can both cut off separately the medium at inlet and outlet to realize double–block function . When the valve is closed , the body cavity and both the bore ends can be blocked with each other even if both ends of the valve are under pressure at the same time , whereas the medium left in the body cavity may relieve through the relief valve .

Test With Poly Silicon Power(Self-Test)

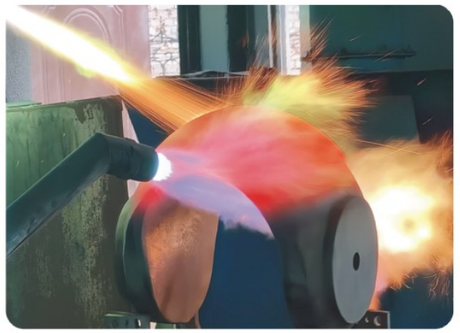

Operation with metal poly silicon powder;

Open/Close 3,000 times operation;

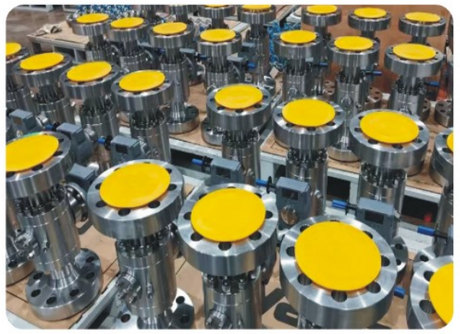

The valve non damage,non leaking;

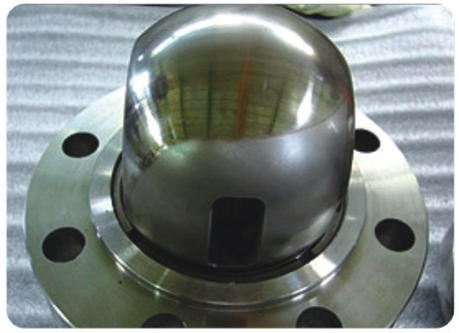

The surface of ball is changing as mirror.

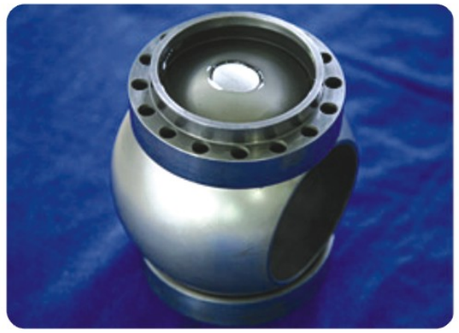

There is no visible leakage within certain time ,while testing by coal oil.

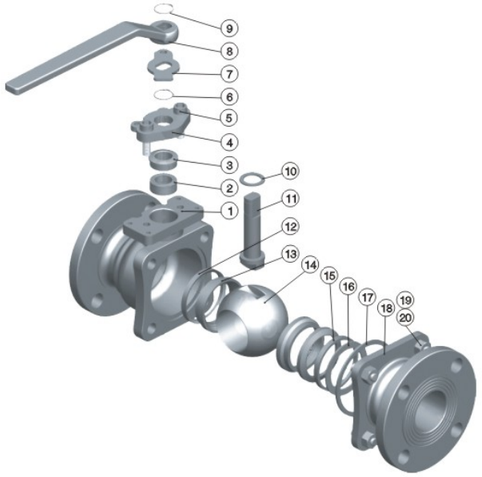

Technical Standard

Design standard	GB/T21385
Face to face dimension	GB/T12221
Flanged end dimension	GB/T9113
Test and Inspection	JB/T9092

Main Parts and Materials

Parts No.	Part Name	Materials				
		WCB/13Cr	WCB/304	WCB/316	CF8	CF8M
1	Body	ASTM A216 WCB	ASTM A216 WCB	ASTM A216 WCB	ASTM A351 CF8	ASTM A351 CF8M
2	Packing	Graphite	Graphite	Graphite	Graphite	Graphite
3	Gland	ASTM A182 F6a	ASTM A182 F304	ASTM A182 F316	ASTM A182 F304	ASTM A182 F316
4	Gland flange	ASTM A216 WCB	ASTM A216 WCB	ASTM A216 WCB	ASTM A351 CF8	ASTM A351 CF8M
5	Gland bolt	ASTM A193 B7	ASTM A193 B7	ASTM A193 B7	ASTM A193 B8	ASTM A193 B8M
6	Circlip	Carbon steel	Carbon steel	Carbon steel	Stainless steel	Stainless steel
7	Stop collar	Carbon steel	Carbon steel	Carbon steel	Stainless steel	Stainless steel
8	Lever	Carbon steel	Carbon steel	Carbon steel	Carbon steel	Carbon steel
9	Circlip	Carbon steel	Carbon steel	Carbon steel	Stainless steel	Stainless steel
10	Thrust washer	304 Sheet+Graphite	304 Sheet+Graphite	316 Sheet+Graphite	304 Sheet+Graphite	316 Sheet+Graphite
11	Stem	ASTM A182 F6a	ASTM A182 F304	ASTM A182 F316	ASTM A182 F304	ASTM A182 F316
12	Seat seal	Graphite	Graphite	Graphite	Graphite	Graphite
13	Seat	ASTM A182 F6a + WC–Co	ASTM A182 F304 + WC–Co	ASTM A182 F316 + WC–Co	ASTM A182 F304 + WC–Co	ASTM A182 F316 + WC–Co
14	Ball	ASTM A182 F6a +WC–Co	ASTM A182 F304 +WC–Co	ASTM A182 F316 +WC–Co	ASTM A182 F304 +WC–Co	ASTM A182 F316 +WC–Co
15	Seat seal gland	ASTM A182 F6a	ASTM A182 F304	ASTM A182 F316	ASTM A182 F304	ASTM A182 F316
16	Spring	Inconel 750	Inconel 750	Inconel 750	Inconel 750	Inconel 750
17	Gasket	304 Sheet+Graphite	304 Sheet+Graphite	316 Sheet+Graphite	304 Sheet+Graphite	316 Sheet+Graphite
18	Closure	ASTM A216 WCB	ASTM A216 WCB	ASTM A216 WCB	ASTM A351 CF8	ASTM A351 CF8M
19	Body bolting	ASTM A193 B7	ASTM A193 B7	ASTM A193 B7	ASTM A193 B8	ASTM A193 B8M
20	Body nut	ASTM A194 2H	ASTM A194 2H	ASTM A194 2H	ASTM A194 8	ASTM A194 8M

Note: The chart above only lists out some common composition of steel ball valve parts. We may provide other different parts material composition according to the customer's request or the actual valve working condition.

Hard Seal Floating Ball Valve

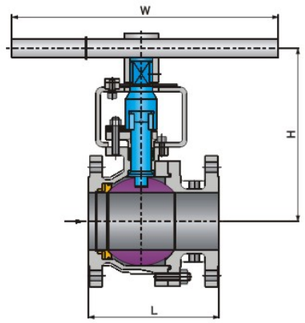

Hand-operated floating

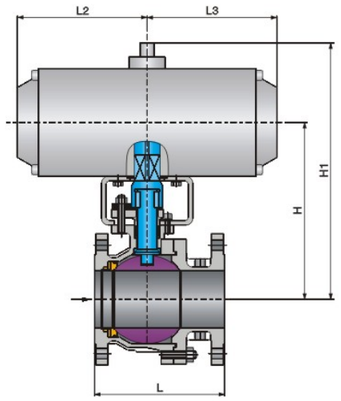

Pneumatic driving floating

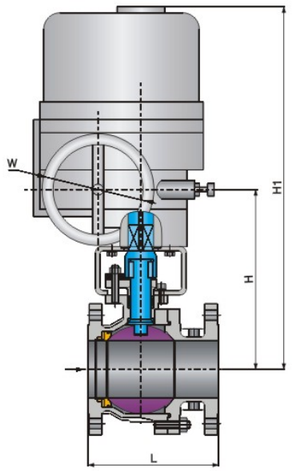

Electric driving floating

Main External Dimensions

PN16/PN20/Class150

Full Bore — Unit: mm

DN	NPS	L	Hand-operated			Worm Gear Operated			Pneumatic Driving					Electric Driving			
			H	W	WT(Kg)	H	W	WT(Kg)	H	H1	L2	L3	WT(Kg)	H	H1	W	WT(Kg)
15	1/2	108	59	130	2.3	--	--	--	200	122	326	136	6.1	--	--	--	--
20	3/4	117	63	130	3.0	--	--	--	204	126	326	136	6.3	--	--	--	--
25	1	127	75	160	4.5	--	--	--	257	162	347	181	8.1	--	--	--	--
40	1 1/2	165	95	230	7.0	--	--	--	264	169	420	181	14.1	--	--	--	--
50	2	178	107	230	9.5	--	--	--	340	209	426	257	16.6	472	377	190	23
65	2 1/2	190	142	350	15.0	--	--	--	370	239	426	257	38	486	391	190	25
80	3	203	152	400	19.0	--	--	--	389	258	590	257	42.1	579	484	190	60
100	4	229	178	500	33.0	--	--	--	594	337	523	287	53	595	500	190	75
125	5	356	252	750	58.0	--	--	--	646	437	610	378	95.3	650	500	400	97
150	6	394	272	750	93.0	292	400	180	646	437	610	378	105.2	739	589	400	162
200	8	457	342	900	1600	398	600	240	781	537	885	530	207.8	799	649	400	226

Hard Seal Floating Ball Valve

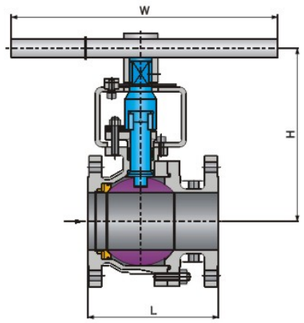

Hand-operated floating

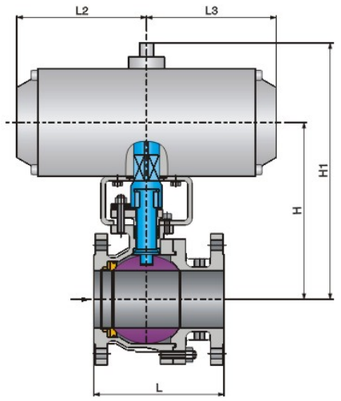

Pneumatic driving floating

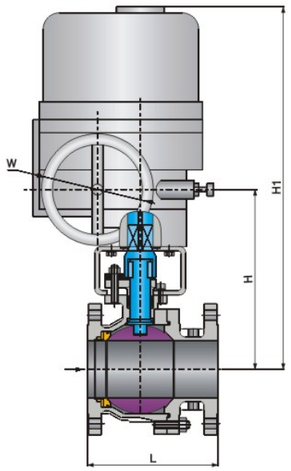

Electric driving floating

Main External Dimensions

PN25/PN40/PN50/Class300

Full Bore — Unit: mm

DN	NPS	L	Hand-operated			Worm Gear Operated			Pneumatic Driving					Electric Driving			
			H	W	WT(Kg)	H	W	WT(Kg)	H	H1	L2	L3	WT(Kg)	H	H1	W	WT(Kg)
15	1/2	140	59	130	2.5	--	--	--	200	122	326	136	6.2	--	--	--	--
20	3/4	152	63	130	3.5	--	--	--	204	126	326	136	6.4	--	--	--	--
25	1	165	75	160	5.5	--	--	--	257	162	347	181	8.5	--	--	--	--
40	1 1/2	190	95	230	10.5	--	--	--	264	169	420	181	16.9	--	--	--	--
50	2	216	167	230	14.5	--	--	--	340	209	426	257	20.9	472	377	190	23
65	2 1/2	241	142	350	23.5	--	--	--	379	248	426	257	42.5	472	391	190	25
80	3	282	152	400	30	--	--	--	452	295	590	257	52.7	579	484	190	60
100	4	305	178	500	55	--	--	--	594	375	523	287	77.9	595	500	190	75
125	5	381	252	750	81	--	--	--	646	437	610	378	107	650	500	400	100
150	6	403	272	750	118	292	400	220	744	500	610	378	130	739	589	400	170
200	8	502	342	900	200	398	600	365	920	615	885	530	220	799	649	400	240

Hard Seal Floating Ball Valve

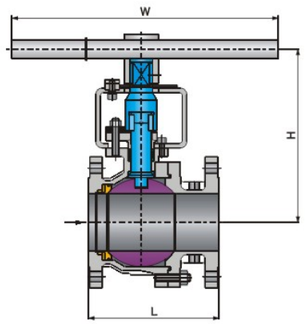

Hand-operated floating

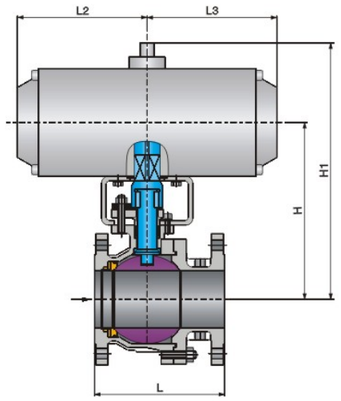

Pneumatic driving floating

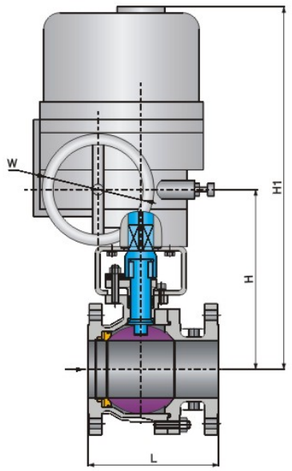

Electric driving floating

Main External Dimensions

PN100/PN110/Class600

Full Bore — **Unit: mm**

DN	NPS	L	Hand-operated			Worm Gear Operated			Pneumatic Driving					Electric Driving			
			H	W	WT(Kg)	H	W	WT(Kg)	H	H1	L2	L3	WT(Kg)	H	H1	W	WT(Kg)
15	1/2	165	59	160	6.5	--	--	--	200	122	283	136	6.5	--	--	--	--
20	3/4	190	63	160	9	--	--	--	204	145	283	181	6.8	--	--	--	--
25	1	216	75	230	13	--	--	--	241	146	283	181	9.3	--	--	--	--
40	1 1/2	241	95	400	16.5	--	--	--	264	169	350	181	17.8	--	--	--	--
50	2	292	167	400	25	--	--	--	340	209	590	257	33.6	472	377	190	25
65	2 1/2	330	180	650	30	--	--	--	379	248	590	257	45.1	599	449	190	60
80	3	356	198	650	55	292	400	72	452	295	523	287	59.3	599	449	190	75
100	4	406 (432)*	198	1050	66	398	600	85	584	375	610	378	81.2	632	472	190	90

Hard Seal Trunnion Ball Valve

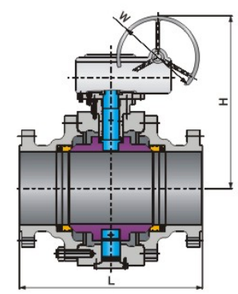

Worm gear operated Trunnion

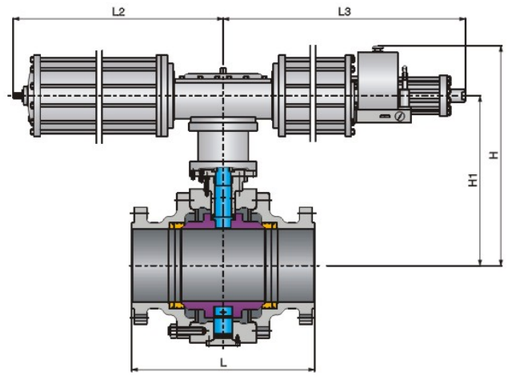

Pneumatic driving Trunnion

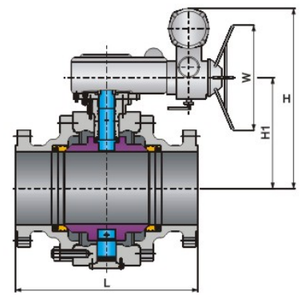

Electric driving Trunnion

Main External Dimensions

PN16/PN20/Class150

Full Bore — **Unit: mm**

DN	NPS	L	Hand-operated			Worm Gear Operated			Pneumatic Driving					Electric Driving			
			H	W	WT(Kg)	H	W	WT(Kg)	H	H1	L2	L3	WT(Kg)	H	H1	W	WT(Kg)
50	2	178	107	230	9.5	--	--	--	269	174	89	181	16.6	--	--	--	--
65	2 1/2	191	125	400	15	--	--	--	379	248	148	257	38	--	--	--	--
80	3	203	152	400	19	--	--	--	389	258	148	257	42.1	--	--	--	--
100	4	229	178	450	33	--	--	--	479	322	287	287	53	--	--	--	--
125	5	356	300	700	58	--	--	--	552	395	287	287	95.3	--	--	--	--
150	6	394	330	750	93	--	--	--	666	457	378	378	105.2	554	337	200	127
200	8	457	--	--	--	398	600	160	804	595	378	378	207.8	600	382	200	210
250	10	533	--	--	--	495	600	180	839	630	378	378	255	652	435	200	270
300	12	610	--	--	--	580	800	240	972	728	530	530	409	761	480	280	420
350	14	686	--	--	--	625	800	390	1127	883	530	530	518	771	520	280	535
400	16	762	--	--	--	670	800	510	1459	1154	680	680	838	831	580	280	862
450	18	864	--	--	--	698	800	750	1529	1224	680	680	1067	921	670	305	1100
500	20	914	--	--	--	840	800	1190	1559	1294	680	680	1295	943	770	305	1350
600	24	1067	--	--	--	1050	800	2600	1145	915	1455	1455	2330	1123	850	305	2420
700	28	1245	--	--	--	1100	800	3000	1160	930	1455	1455	3200	1218	945	400	3410
800	32	1372	--	--	--	1150	800	4490	1460	1100	1665	1665	4750	1328	1055	400	5120
900	36	1524	--	--	--	1230	800	7800	1540	1180	1665	1665	8200	1696	1130	460	9100

Hard Seal Trunnion Ball Valve

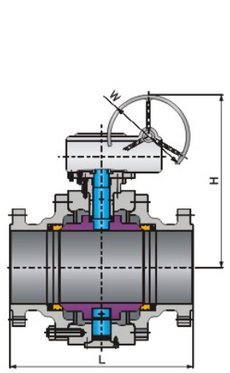

Worm gear operated Trunnion

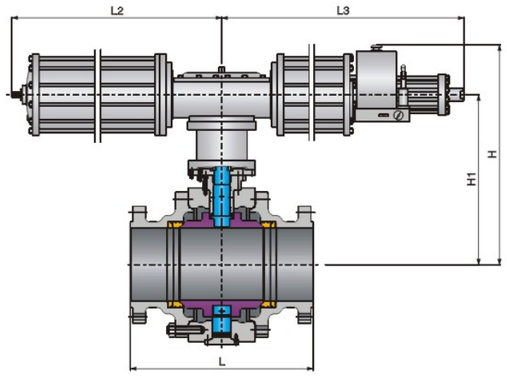

Pneumatic driving floating

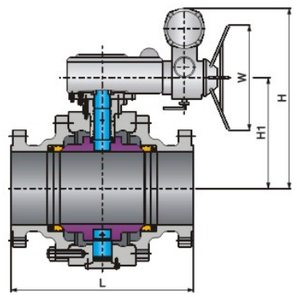

Electric driving floating

Main External Dimensions

PN25/PN40/PN50/Class300

Full Bore — Unit: mm

DN	NPS	L	Hand-operated			Worm Gear Operated			Pneumatic Driving					Electric Driving			
			H	W	WT(Kg)	H	W	WT(Kg)	H	H1	L2	L3	WT(Kg)	H	H1	W	WT(Kg)
50	2	216	107	230	20.9	--	--	--	360	229	148	181	45	--	--	--	--
65	2 1/2	241	125	400	42.5	--	--	--	388	257	148	257	70	--	--	--	--
80	3	283	152	400	52.9	--	--	--	476	319	287	287	95	--	--	--	--
100	4	305	178	600	92	--	--	--	418	361	287	287	153	--	--	--	--
125	5	381	300	700	145	--	--	--	621	412	378	378	260	--	--	--	--
150	6	403	330	800	182	--	--	--	701	492	378	378	450	710	492	200	460
200	8	502	--	--	--	398	600	278	701	492	378	378	450	710	492	200	460
250	10	568	--	--	--	495	600	500	771	527	530	530	750	744	527	200	780
300	12	648	--	--	--	580	800	733	814	570	530	530	1140	851	570	280	1150
350	14	762	--	--	--	625	800	1029	913	608	680	680	1580	859	608	280	1620
400	16	838	--	--	--	670	800	1418	1013	708	680	680	2550	959	708	280	2160
450	18	914	--	--	--	698	800	1592	1148	748	680	680	2300	999	748	305	2400
500	20	991	--	--	--	840	800	2195	1190	790	1455	1455	3100	963	790	305	3120
600	24	1143	--	--	--	1050	800	3460	1316	886	1455	1455	4400	1141	866	305	4500
700	28	1346	--	--	--	1100	800	5770	1410	960	1665	1665	6000	1233	960	400	6100
800	32	1524	--	--	--	1150	800	7932	1518	1068	1665	1665	8120	1341	1068	400	8210
900	36	1727	--	--	--	1230	800	10093	1740	1140	1960	1960	11200	1696	1100	460	11400

Hard Seal Trunnion Ball Valve

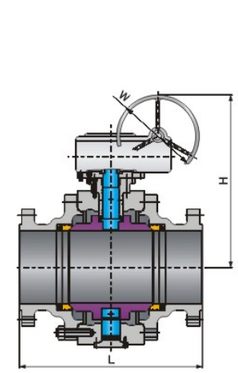

Worm gear operated Trunnion

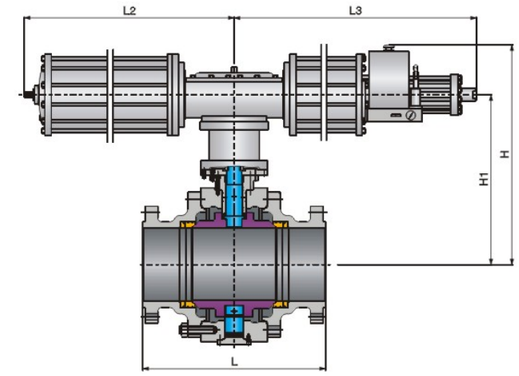

Pneumatic driving Trunnion

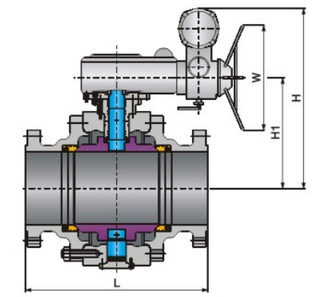

Electric driving Trunnion

Main External Dimensions

PN100/PN110/Class600

Full Bore — Unit: mm

DN	NPS	L	Hand-operated			Worm Gear Operated			Pneumatic Driving					Electric Driving			
			H	W	WT(Kg)	H	W	WT(Kg)	H	H1	L2	L3	WT(Kg)	H	H1	W	WT(Kg)
50	2	292	136	500	35	--	--	--	269	209	148	257	60	--	--	--	--
65	2 1/2	330	164	650	42	--	--	--	--	--	--	--	--	--	--	--	--
80	3	356	191	650	66	--	--	--	519	295	287	287	112	--	--	--	--
100	4	432	--	--	--	244	600	180	636	479	287	287	196	--	--	--	--
150	6	559	--	--	--	309	600	270	728	519	378	378	380	527	309	200	410
200	8	660	--	--	--	361	800	500	839	595	530	530	585	533	361	200	480
250	10	787	--	--	--	412	800	780	1014	770	530	530	760	653	412	280	860
300	12	838	--	--	--	475	800	1100	1120	810	680	680	1190	652	475	280	1320
350	14	889	--	--	--	502	800	1200	1224	1004	1445	1445	1650	801	502	280	1750
400	16	991	--	--	--	533	800	1600	1374	1154	1445	1445	2550	784	533	305	2280
450	18	1092	--	--	--	636	800	2160	--	--	--	--	--	809	636	305	2620
500	20	1194	--	--	--	675	800	2700	1490	1210	1665	1665	3200	948	675	305	3350
600	24	1397	--	--	--	759	800	5000	1615	1335	1665	1665	4520	1038	765	400	4720
700	28	1549	--	--	--	836	800	7000	1760	1410	1960	1960	6350	1253	980	400	6540
800	32	1778	--	--	--	915	800	9800	--	--	--	--	--	1473	1150	600	8800
900	36	2083	--	--	--	987	800	14000	--	--	--	--	--	1287	987	600	14500

Hard Seal Trunnion Ball Valve

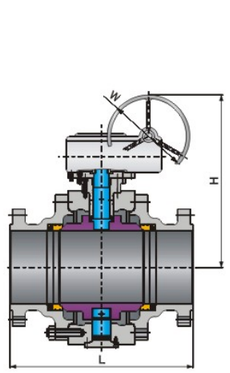

Worm gear operated Trunnion

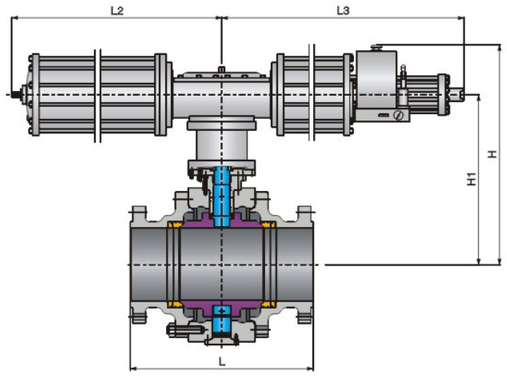

Pneumatic driving floating

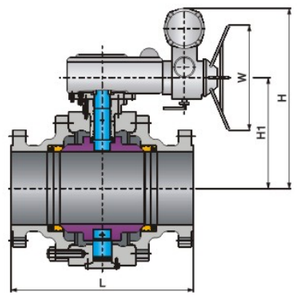

Electric driving floating

Main External Dimensions

PN150/PN160/Class900

Full Bore — Unit: mm

DN	NPS	L	Hand-operated			Worm Gear Operated			Pneumatic Driving					Electric Driving			
			H	W	WT(Kg)	H	W	WT(Kg)	H	H1	L2	L3	WT(Kg)	H	H1	W	WT(Kg)
50	2	368	148	650	50	--	--	--	519	295	287	287	80	--	--	--	--
65	2 1/2	419	191	650	55	--	--	--	--	--	--	--	--	--	--	--	--
80	3	381	216	650	80	--	--	--	728	519	378	378	145	--	--	--	--
100	4	457	--	--	--	270	600	150	842	595	530	530	225	418	270	200	240
150	6	610	--	--	--	384	800	360	1014	770	530	530	380	625	384	280	390
200	8	737	--	--	--	435	800	620	1120	815	680	680	700	612	435	280	710
250	10	838	--	--	--	518	800	1100	1124	1004	1455	1455	1200	817	518	280	1300
300	12	965	--	--	--	657	800	1600	1374	1154	1455	1455	1750	908	657	305	1780
350	14	1092	--	--	--	693	800	1850	1490	1210	1665	1665	1900	866	693	305	2000
400	16	1130	--	--	--	762	800	2200	1615	1335	1665	1665	2300	1035	762	305	2410
450	18	1219	--	--	--	866	800	2800	1760	1410	1960	1960	2900	1139	866	400	3110
500	20	1321	--	--	--	894	800	4250	1760	1410	1960	1960	4350	1167	894	400	4420
600	24	1549	--	--	--	965	800	7000	1760	1410	1960	1960	8100	1279	956	600	8250

Hard Seal Trunnion Ball Valve

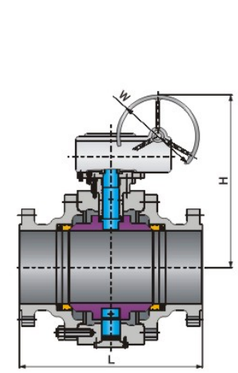

Worm gear operated Trunnion

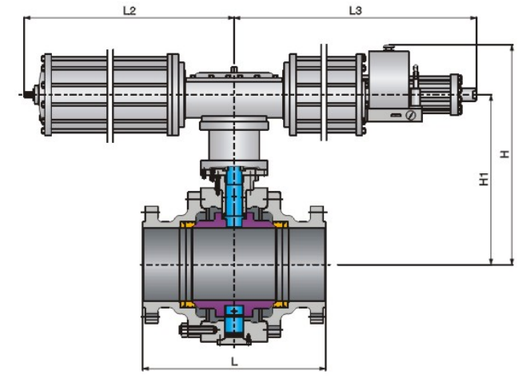

Pneumatic driving Trunnion

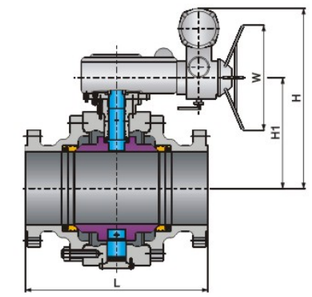

Electric driving Trunnion

Main External Dimensions

PN250/PN260/Class1500

Full Bore — Unit: mm

DN	NPS	L	Hand-operated			Worm Gear Operated			Pneumatic Driving					Electric Driving			
			H	W	WT(Kg)	H	W	WT(Kg)	H	H1	L2	L3	WT(Kg)	H	H1	W	WT(Kg)
50	2	368	175	650	60	175	400	65	519	295	287	287	90	--	--	--	--
65	2 1/2	419	191	650	70	191	400	82	728	519	378	378	135	--	--	--	--
80	3	470	216	750	85	216	600	100	842	595	530	530	155	388	216	200	160
100	4	546	--	--	--	247	600	210	1014	770	530	530	280	488	247	280	280
150	6	705	--	--	--	329	800	500	1120	815	680	680	510	506	329	280	520
200	8	832	--	--	--	492	800	850	1124	1004	1455	1455	900	591	392	280	950
250	10	991	--	--	--	428	800	1600	1374	1154	1455	1455	1710	679	428	305	1800
300	12	1130	--	--	--	640	800	2300	1490	1210	1665	1665	2350	813	640	305	2400
350	14	1257	--	--	--	670	800	2950	1615	1335	1665	1665	3100	943	670	305	3300
400	16	1384	--	--	--	700	800	4200	1760	1410	1960	1960	4410	973	700	400	4510
450	18	1537	--	--	--	755	800	5000	1760	1410	1960	1960	5100	1048	755	400	6200
500	20	1664	--	--	--	830	800	5600	1760	1410	1960	1960	6100	1153	830	600	7200
600	24	2043	--	--	--	952	800	2200	--	--	--	--	--	--	--	--	--

Eccentric Half-Ball Valve

Product Overview

Eccentric half ball valve is developed based on absorbing overseas . the structure is eccentric–tight principle through transmission gear to achieve the purpose of tightening , adjusting closing . Vice–seal is metal surface ring with hard surface contact sealing . The double eccentric structure will be located in ball storing room and make the flow cross–section large and the valve will not be washed . When closed the valve disc will not be washed and when open the valve disc ball surface will asymptote along valve seat to remove the scaling obstacles and achieve reliable seal . It is effective especially to the mixed flow transportation separated out of two mixed flowing easily scaling solids . The second feature is that the half ball of valve is double metal and different alloy overlaid on the base metal ;the valve seat is also overlaid by special treatment of retirement to make the sealing surface different types of anti–corrosion , wear–resistant ,high–strength and so on to meet the needs of different occasions . The third feature is tight seal to achieve zero leakage at transmission of harmful gases . The forth feature is that vice seal left compensation amount. After the valve seat is wore (the rigidity of valve seat is lower than that of the valve disc),when move a little after closing , the seal will be still reliable to extend the useful life . Besides , the valve is still useful when the users screw off the pressed nut or adjust or change the valve seat to avoid the short–coming of existing valves seal invalidation results in the while valve scraps. So overlaid different alloy (or assembly ball) double metal vice–seal can be applied to different industrial sectors of wear–resistant , corrosion–resistant , high temperature and so on as well as strictly seal requirements . The main purpose and features of product.

Technical Specifications

Design Standard	GB/T12237
Structure Length	GB/T12221
Face to Face Dimension	GB/T9113
Test and Inspection	JB/T9092

GB Eccentric Half-Ball Valve

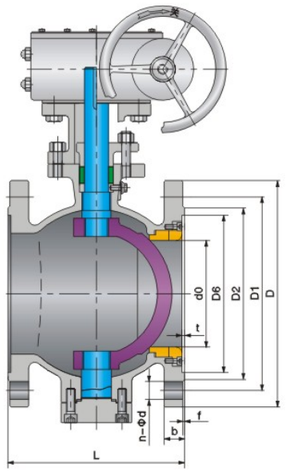

Worm gear operated

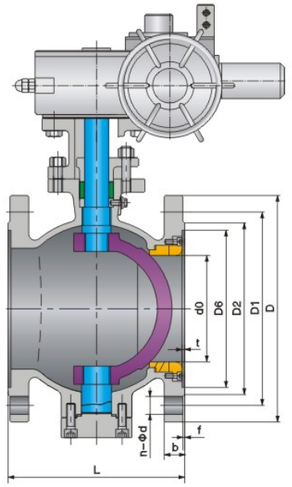

Electric driven

Main External Dimensions

PN0.6MPa

DN	L	D	D1	D2	f	b	n–Φd
50	178	140	110	90	3	16	4–14
65	190	160	130	110	3	16	4–14
80	203	185	150	125	3	18	4–18
100	229	205	170	145	3	18	4–18
125	254	235	200	175	3	20	8–18
150	267	260	225	200	3	20	8–18
200	292	315	280	255	3	22	8–18
250	330	370	335	310	3	24	12–18
300	502	435	395	362	4	24	12–23
350	575	485	445	412	4	26	12–23
400	610	535	495	462	4	28	16–23
450	660	590	550	518	4	28	16–23
500	711	640	600	568	4	30	16–23
600	787	755	705	670	5	30	20–26
700	990	860	810	775	5	32	24–26
800	1000	975	920	880	5	32	24–30

GB Eccentric Half-Ball Valve

Main External Dimensions

PN1.0MPa

DN	L	D	D1	D2	f	b	n-Φd
50	178	160	125	100	3	18	4-18
65	190	180	145	120	3	20	4-18
80	203	195	160	135	3	20	4-18
100	229	215	180	155	3	22	8-18
125	254	245	210	185	3	24	8-18
150	267	280	240	210	3	24	8-23
200	292	335	295	265	3	24	8-23
250	330	390	350	320	3	26	12-23
300	502	440	400	368	4	28	12-23
350	572	500	460	428	4	28	16-23
400	610	565	515	482	4	30	16-26
450	660	615	565	532	4	30	20-26
500	711	670	620	585	4	32	20-26
600	787	780	725	685	5	36	20-30
700	900	895	840	800	5	38	24-30
800	1000	1010	950	905	5	42	24-34

PN1.6MPa

DN	L	D	D1	D2	f	b	n-Φd
50	178	160	125	100	3	16	4-18
65	190	180	145	120	3	18	4-18
80	203	195	160	135	3	20	8-18
100	229	215	180	155	3	20	8-18
125	254	248	210	185	3	22	8-18
150	267	280	240	210	3	24	8-23
200	267	335	295	265	3	26	12-23
250	292	405	355	320	3	30	12-26
300	330	460	410	375	4	30	12-26
350	502	520	470	435	4	34	16-26
400	572	580	525	485	4	36	16-30
450	610	640	585	545	4	40	20-30
500	660	705	650	608	5	44	20-34
600	711	840	770	718	5	48	20-41
700	787	910	840	788	5	50	24-41
800	900	1020	950	898	5	52	24-41
900	1000	1120	1050	998	5	54	28-41
1000	1100	1255	1170	1110	5	56	28-42

PN2.5MPa

DN	L	D	D1	D2	f	b	n-Φd
50	178	160	125	100	3	20	4-18
65	190	180	145	120	3	22	8-18
80	203	195	160	135	3	22	8-18
100	229	230	190	160	3	24	8-23
125	254	270	220	188	3	28	8-26
150	267	300	250	218	3	30	8-26
200	292	360	310	278	3	34	12-26
250	330	425	370	332	3	36	12-30
300	502	485	430	390	4	40	16-30
350	572	550	490	448	4	44	16-34
400	610	610	550	505	4	48	16-34
450	660	660	600	555	4	50	20-34
500	711	730	660	610	4	52	20-41
600	787	840	770	718	5	56	20-41
700	900	955	875	815	5	60	24-48
800	1000	1070	990	930	5	64	24-48
900	1100	1180	1090	1025	5	66	28-48
1000	1200	1305	1210	1140	5	68	28-58

PN4.0MPa

DN	L	D	D1	D2	D6	f	t	b	n-Φd
50	178	160	125	100	88	3	4	20	4-18
65	190	180	145	120	110	3	4	22	8-18
80	203	195	160	135	121	3	4	22	8-18
100	229	230	190	160	150	3	4.5	24	8-23
125	254	270	220	188	176	3	4.5	28	8-26
150	267	330	250	218	204	3	4.5	30	8-26
200	292	375	320	282	260	3	4.5	38	12-30
250	330	445	385	345	313	3	4.5	42	12-34
300	502	510	450	405	364	4	4.5	46	16-34
350	572	570	510	465	422	4	5	52	16-34
400	610	655	585	535	474	4	5	58	16-41
450	660	680	610	560	524	4	5	60	20-41
500	711	755	670	612	576	4	5	62	20-48
600	787	890	795	730	678	5	6	62	20-54
700	900	995	900	835	768	5	6	68	24-54
800	1000	1135	1030	960	876	5	6	76	24-58

API Eccentric Half-Ball Valve

Technical Specifications

Design and Manufacture	API 608
Flange Connection	ASME/ANSI B16.5
Test and Inspection	API 598
Face to Face	ASME/ANSI B16.10

Main Parts and Materials

Part Name	Parts Material Code		
	C	P	R
Body	WCB	CF8	CF3
Down bonnet	420	304	316
Upper stem	420	304	316
Trunnion stem	420	304	316
Seat clamp	420	304	316
Seat	420	304	316
Ball	A216	CF8	CF3
Sealing material (Y)	STL	STL	STL
Sealing material (F)	PTFE	PTFE	PTFE

Performance Parameter

Nominal pressure PN(Mpa)	150LB	300LB
Nominal diameter (mm)	2"~32"	2"~32"
High pressure seal test pressure(MPa)	1.76	4.4
Shell strength test pressure (Mpa)	2.4	6.0
Hermetic seal test pressure(MPa)	0.6	0.6
Suitable temperature (℃)	-29~300、-29~425	
Suitable medium	Coal dust, dregs, acid base, slurry, steam, fuel gas oil etc.	
Actuated type	Hand-operated,electric, pneumatic	
Type of connection	Flange connection	
Type of installation	Vertical installation、Horizontal i nstallation	

Ordering Instructions

1. Hard(soft) seal eccentric semi-ball valve has different temperature range, different medium, so buyer should indicate the temperature and medium when ready to order.
2. We can design and produce separately according to buyer's requirements if this type is not mentioned in our manual.

API Eccentric Half-Ball Valve

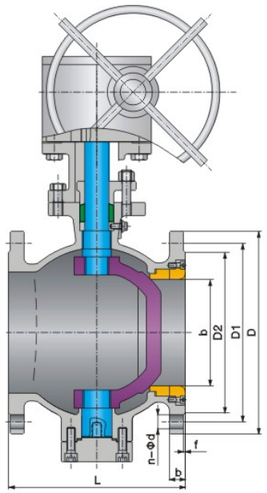

Worm gear operated

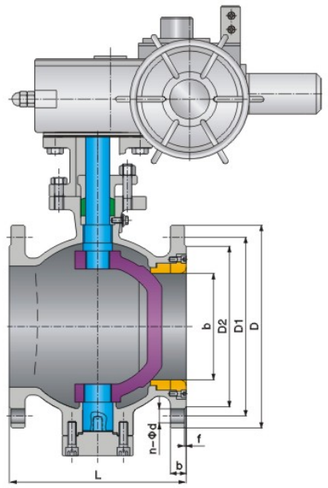

Electric driven

Main External Dimensions

Class 150

DN	L	D	D1	D2	f	b	n-Φd
2"	178	152	120.5	92	1.6	15.9	4-19
3"	203	190	152.5	127	1.6	19.1	4-19
4"	229	229	190.5	157	1.6	23.9	8-19
5"	254	254	216.5	186	1.6	23.9	8-22
6"	267	279	241.5	216	1.6	25.4	8-22
8"	292	343	298.5	270	1.6	28.6	8-22
10"	330	406	362	324	1.6	30.2	12-25
12"	502	483	432	381	1.6	31.8	12-25
14"	575	533	476	413	1.6	35	12-29
16"	610	597	539.5	470	1.6	36.5	16-29
18"	660	635	578	533	1.6	39.7	16-32
20"	711	698	635	584	1.6	43	20-32
24"	787	813	749.5	692	1.6	47.7	20-35
28"	900	927	863.6	800	1.6	71.5	28-35
32"	1000	1060	978	914.5	1.6	80.8	28-41

Class 300

DN	L	D	D1	D2	f	b	n-Φd
2"	178	165	127	92	1.6	22.3	8-19
3"	203	210	168	127	1.6	28.5	8-22
4"	229	254	200	157	1.6	31.8	8-22
5"	254	279	235	186	1.6	35	8-22
6"	267	318	270	216	1.6	36.5	12-22
8"	292	381	330	270	1.6	41.3	12-25
10"	330	444	387.5	324	1.6	47.7	16-29
12"	502	521	451	381	1.6	50.8	16-32
14"	575	584	514	413	1.6	54	20-32
16"	610	648	571.5	470	1.6	57.2	20-35
18"	660	711	628.5	533	1.6	60.5	24-35
20"	711	775	686	584	1.6	63.5	24-35
24"	787	914	813	692	1.6	70	24-41
28"	900	1035	939.8	800	1.6	85.8	28-44.5
32"	1000	1149	1054	914.5	1.6	98.5	28-51

Ceramics Ball Valve

Structural design characteristic

Ceramic material property

The valve has the exceedingly high wear-proof capability, corrosion resisting, enduring capability, good heat insulation, small thermal expansion All parts that contact the media are made of structural ceramics with extremely high chemical stability and hardness (HRC90) only inferior to diamond.

Manufacture process

The ball is processed by advanced polishing equipment that can ensure high circularity, accuracy, good surface quality. The self-lubricating capability of ZrO2, ensure the good sealing performance. This makes hard seal valve totally free from the defects such as having big torque, non-corrosion-resistant and the sealing works badly.

Scope of application

The valve fits in granule medium of high hardness, or medium with erosive soft granule. It is also the only valve suitable for this type of Medium. They are widely used in petroenemical industry, metallurgy, Mining, power station, medicine and papermaking and so on.

Technical Standard

Design Standard	GB/T12237
Face to Face Dimension	GB/T12221
Flanged End Dimension	GB/T9113
Test and Inspection	JB/T9092

Main Parts and Materials

Part Name	Material
Body	Cast steel , Cast stainless steel
Bonnet	Cast steel , Cast stainless steel
Stem	Martensitic stainless steel , Āustenitic stainless steel , Duplex stainless steel
Ball	Ceramics
Seal ring	Ceramics

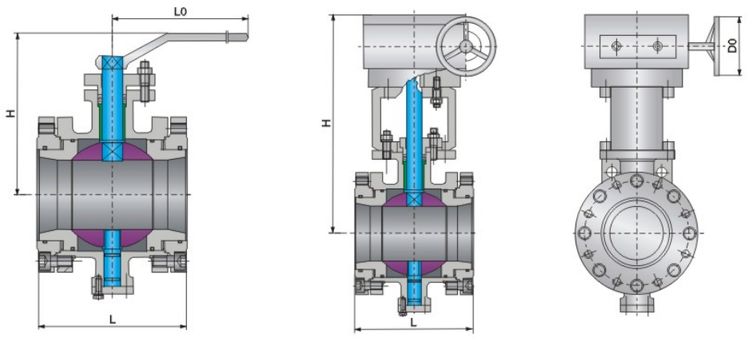

Lever operated ceramics ball valve

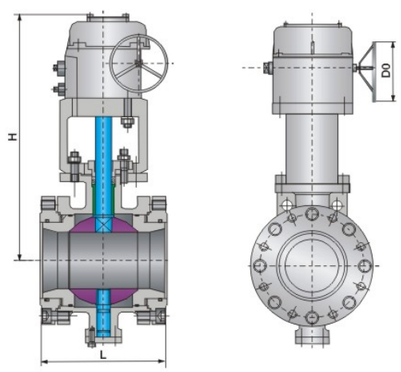

Electric driving ceramics ball valve

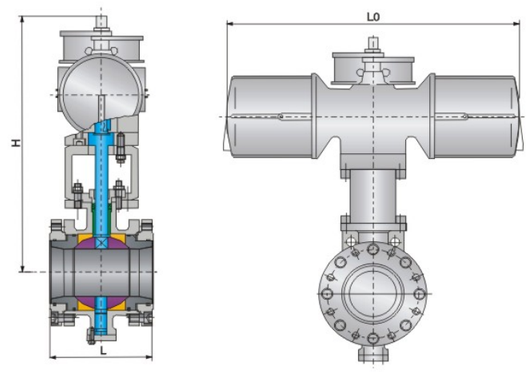

Pneumatic driving ceramics ball valve

Main External Dimensions

PN1.0MPa

DN	L	Hand-operated		Electric Driving		Pneumatic Driving	
		H	D0	H	D0	H	L0
15	108	85	160	233	160	198	168
20	117	94		242		207	
25	127	100	230	248		235	204
32	140	114		262		242	
40	165	121	320	269	196	261	260
50	178	140		288		270	
65	190	158		306		302	
80	203	176	400	362	255	332	298
100	229	202	--	388		355	
125	254	252	--	438		406	390
150	267	276	--	462		503	458
200	292	293	--	479		527	

Main External Dimensions

PN16/PN20/Class150

DN	b	L	Hand-operated		Electric Driving		Pneumatic Driving	
			H	D0	H	D0	H	L0
15	14	108	85	160	233	160	198	168
20	14	117	94		242		207	
25	14	127	100	230	248		235	204
32	16	140	114		262	196	242	
40	16	165	121	320	269		261	260
50	16	178	140		288	255	270	
65	18	190	158		306		302	
80	20	203	176	400	362		332	298
100	20	229	202	--	388		355	
125	22	254	252	--	438		406	390
150	24	267	276	--	462		503	458
200	26	292	293	--	479		527	

PN25/PN40/PN50/Class300

DN	b	L	Hand-operated		Electric Driving		Pneumatic Driving	
			H	D0	H	D0	H	L0
15	16	108	85	160	233	160	198	168
20	16	117	94		242		207	
25	16	127	100	230	248		235	204
32	18	140	114		262		242	
40	18	165	121	320	269	196	261	260
50	20	178	140		288		270	
65	22	190	158		306	255	302	
80	22	203	176	400	362		332	298
100	24	229	202	--	388		355	
125	28	254	252	--	438		406	390
150	30	267	276	--	462		503	458
200	34	292	293	--	479		527	

PN100/PN110/Class600

DN	b	L	Hand-operated		Electric Driving		Pneumatic Driving	
			H	D0	H	D0	H	L0
15	16	108	90	160	238	160	203	168
20	16	117	100		248		213	
25	16	127	105	230	253		231	204
32	18	140	120		268	196	246	
40	18	165	128	320	276		273	260
50	20	178	146		294	255	293	
65	22	190	165		313		328	
80	22	203	185	400	371		366	298
100	24	229	210	--	396		394	
125	28	254	265	--	451		445	390
150	30	267	290	--	476		541	458
200	38	292	308	--	494		586	

Orbit Ball Valve

Characteristics

1,Non-abrasion for on-off, which fully resolves the problem of mutual abrasion affecting sealing performances of sealing surfaces I traditional Valves.

2,Top-entry construction, with which the valves on pipelines could be online checked and repaired directly. Thus the engine stopping could be effectively minimized to reduce the production cost.

3,Single-seat design, which eliminates those problems affecting safety caused by abnormal temperature-rise from the medium in the paaway of the valve.

4,Low torsional moment design, with the Stem with specially designed structure could be opened or shut down with down with merely a small hand wheel valve.

5,Wedge-type sealing construction. Traditionally the valve would be sealed through the mechanical force provided by the Stem to widge press the ball onto the valve seat. With this design, the sealing performance of the valve would never be influenced by the fluctuation of the pressure differences in pipelines and the performance would be reliably maintained under all the operating modes.

6,Self-purging construction of sealing surface. The fluid inside the pipeline would pass through evenly by 360℃; along the sealing face on the body when the body sidingly leaves the seat. This design not only eliminates the scouring on parts on the valve seat by high-speed fluid, but also washes away the piled-up matter on the surface to realize self-purging.

Technical Standard

Design Standard	GB/T12237-2007
Face to Face Dimension	GB/T12221
Flanged End Dimension	GB/T9113
Test and Inspection	JB/T9092

Orbit Ball Valve

Operating Principle

1,Rote the hand-wheel clock wisely when the valve is at full open position. After wards the stem begins to move downwards and brings along the globe body to rotate under the concerted running of valve stem nuts and block bearing.

2,Continuously rotate the handwheel, and then the cam-slot track with fine helical-curve would mutually interact with the guide finger embedded inside the track to ceaselessly drive the globe body rotate clock wisely with the stem.

3,When the valve is about to shutdown, the stem would bring along the globe to rotate for 90° , underthe condition that the two parts completely bears noabrasion against the sealing surface of the seat.

4,Continue to rotate the hand-wheel and then the gain-descended stem would mechanically press the globe body to make it closely contact with the seat. Thus the sealing effect would realize.

5,Rotate the hand-wheel counter clock wisely while the valve stays at the full-closed position. There fore the handle would go up and drive the globe body to leave the seat.

6,Lifting the hand-wheel continuously, the ball will rise together with the movement of stem.

7,When the valve is about to open, the cam-slot track with fine helicalcurve would mutually interact with the guide finger embedded inside the track to ceaselessly drive the globe body rotate counter-clock wisely under the condition that the mentioned parts completely bears no abrasion against the sealing suiface of the seat.

8,Contiuously rotate the hand-wheel, as long as the stem rises to the limiting position, at this time, the ball gas also reversed along with the handle for 90° ,and the valve gas already stayed at the full-open position.

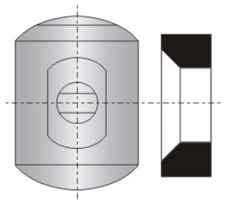

Figure 1

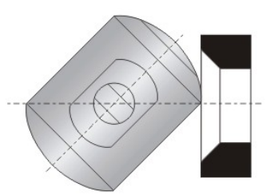

Figure 2

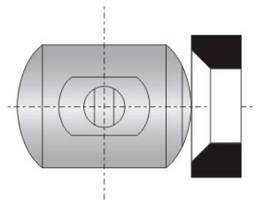

Figure 3

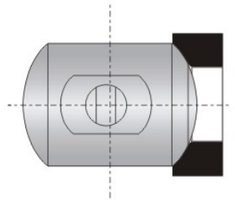

Figure 4

Main Parts and Materials

Part Name	Material
Body	Cast steel , Cast stainless steel
Bonnet	Cast steel , Cast stainless steel
Stem	Martensitic stainless steel , Austenitic stainless steel
Ball	Martensitic stainless steel , Austenitic stainless steel
Seal ring	Hard alloy , Alloy steel

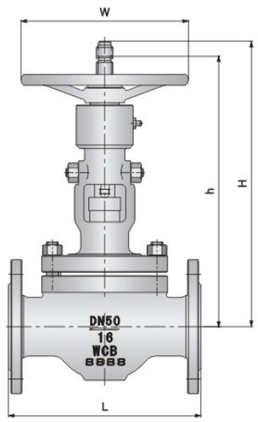

Structural form：A

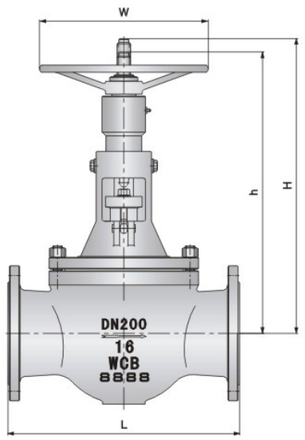

Structural form：B

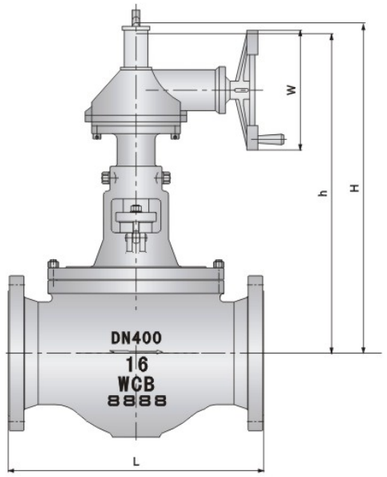

Structural form：C

Main External Dimensions

PN1.6MPa

DN	Structural form	mm				Double-ended bolt	
		L	H	h	W	Quantity	Thread
25	A	200	285	255	160	4	M12
40	A	200	325	290	200	4	M16
50	A	230	345	305	200	4	M16
65	A	290	385	340	250	4	M16
80	A	310	445	400	250	8	M16
100	B	350	485	430	300	8	M16
125	B	400	530	490	300	8	M16
150	B	480	620	560	350	8	M20
200	B	600	710	630	350	12	M20
250	B	730	850	770	350	12	M22
300	C	850	1050	970	400	12	M22
350	C	980	1230	1130	450	16	M22
400	C	1100	1520	1400	600	16	M27
450	C	1200	1610	1470	650	20	M27
500	C	1250	1680	1520	700	20	M30
600	C	1450	1770	1610	700	20	M36

PN2.5MPa

DN	Structural form	mm				Double-ended bolt	
		L	H	h	W	Quantity	Thread
25	A	200	285	255	160	4	M12
40	A	200	325	290	200	4	M16
50	A	230	345	305	200	4	M16
65	A	290	385	340	250	8	M16
80	A	310	445	400	250	8	M20
100	B	350	485	430	300	8	M20
125	B	400	530	490	300	8	M20
150	B	480	620	560	350	8	M20
200	B	600	710	630	350	12	M22
250	B	730	850	770	350	12	M27
300	C	850	1050	970	400	16	M27
350	C	980	1230	1130	450	16	M30
400	C	1100	1520	1400	600	16	M30
450	C	1200	1610	1470	650	20	M30
500	C	1250	1680	1520	700	20	M36
600	C	1450	1770	1610	700	20	M36

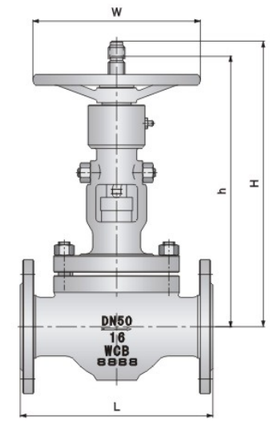

Structural form：A

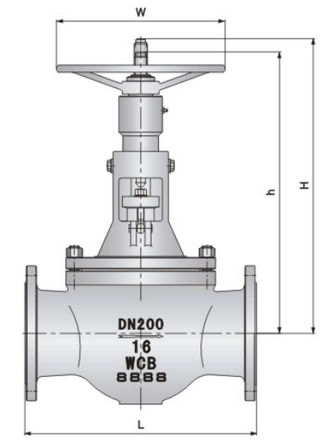

Structural form：B

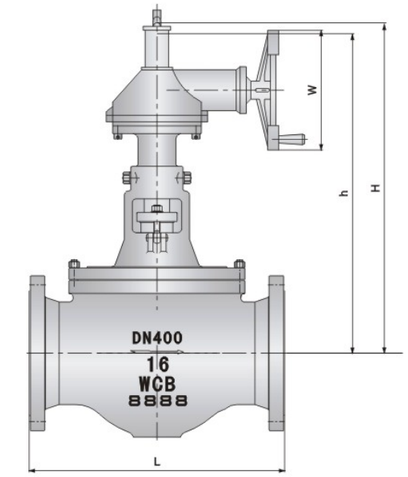

Structural form：C

Main External Dimensions

PN4.0MPa

DN	Structural form	mm				Double-ended bolt	
		L	H	h	W	Quantity	Thread
25	A	200	285	255	160	4	M12
40	A	200	325	290	200	4	M16
50	A	230	345	305	200	4	M16
65	A	290	385	340	250	4	M16
80	A	310	445	400	250	8	M16
100	B	350	485	430	300	8	M20
125	B	400	530	490	300	8	M22
150	B	480	620	560	350	8	M22
200	B	600	710	630	350	12	M27
250	B	730	850	770	350	12	M30
300	C	850	1050	970	400	12	M30
350	C	980	1230	1130	450	16	M30
400	C	1100	1520	1400	600	16	M36
450	C	1200	1610	1470	650	20	M36
500	C	1250	1680	1520	700	20	M42
600	C	1450	1770	1610	700	20	M50

PN6.4MPa

DN	Structural form	mm				Double-ended bolt	
		L	H	h	W	Quantity	Thread
25	A	200	285	255	160	4	M20
40	A	200	325	290	200	4	M20
50	A	230	345	305	200	4	M20
65	A	290	385	340	250	8	M20
80	A	310	445	400	250	8	M20
100	B	350	485	430	300	8	M22
125	B	400	530	490	300	8	M27
150	B	480	620	560	350	8	M30
200	B	600	710	630	350	12	M30
250	B	730	850	770	350	12	M36
300	C	850	1050	970	400	12	M36
350	C	980	1230	1130	450	16	M36
400	C	1100	1520	1400	600	16	M42
500	C	1250	1680	1520	700	20	M48
600	C	1450	1770	1610	700	20	M54

Orbit Ball Valve

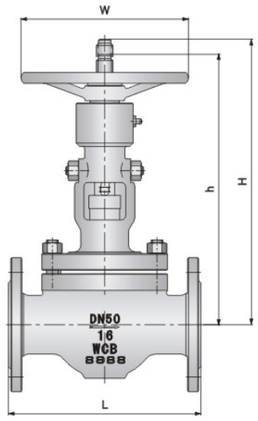

Structural form：A

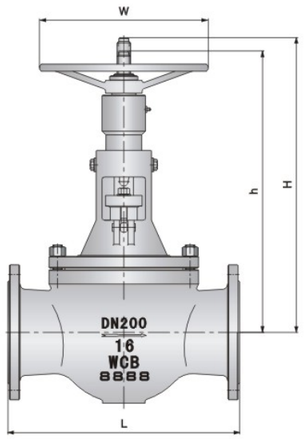

Structural form：B

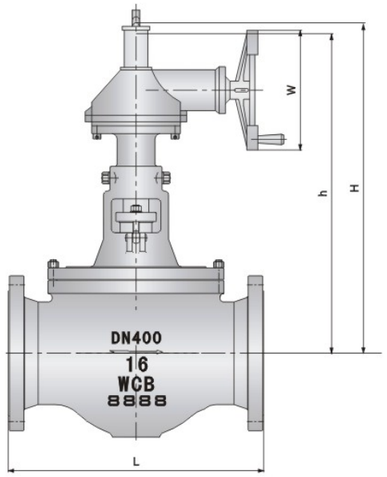

Structural form：C

Main External Dimensions

PN10.0MPa

DN	Structural form	mm				Double-ended bolt	
		L	H	h	W	Quantity	Thread
25	A	230	345	315	200	4	M16
40	A	260	385	350	250	4	M20
50	A	300	410	370	300	4	M22
65	A	340	435	395	300	8	M22
80	A	380	525	400	350	8	M22
100	B	430	605	550	350	8	M27
125	B	500	650	620	350	8	M30
150	B	550	720	780	400	12	M30
200	B	650	910	830	500	12	M36
250	B	775	1060	960	550	12	M36
300	C	900	1250	1140	600	16	M42
350	C	1025	1440	1330	600	16	M48
400	C	1150	1620	1500	700	16	M48

PN16.0MPa

DN	Structural form	mm				Double-ended bolt	
		L	H	h	W	Quantity	Thread
25	A	230	345	315	200	4	M20
40	A	260	385	350	250	4	M24
50	A	300	410	370	250	4	M22
65	A	340	435	395	300	8	M27
80	A	380	525	400	300	8	M27
100	B	430	605	550	350	8	M30
125	B	500	650	620	350	8	M36
150	B	550	720	780	400	12	M36
200	B	650	910	830	500	12	M42
250	B	775	1060	960	550	12	M48
300	C	900	1250	1140	600	16	M48

Cryogenic Ball Valve

Purpose

Cryogenic ball valves are mainly used in the chemical equipment of ethylene and LNG etc. to handle cryogenic liquid medium like ethylene, Liquid oxygen, liquid hydrogen and so on. These types of inflammable and explosive medium can be volumetrically expanded by several hundred times when being gasified under temperature rise ,and are difficult to manufacture due to their highly penetrative and leaky Properties.

Structure Characteristics

1,The materials of compression parts can endure the expansion and shrinkage resulted from the temperature variation of medium, and seal structure is away from permanent deformation under temperature changes.To work under the conditions below -100℃,the parts of valve shall be subject to sub-zero treatment before finish machining. Namely, have the parts cooled in liquid nitrogen box, when the temperature of parts reaches-196℃, keep the temperature for 1-2h, then take them out to have them to the normal temperature naturally, and do in this way twice.

2,Bonnet is shaped long-necked for the purpose to protect the function of packing box, making packing box somewhat away from low temperature to ensure good seal of packing. Besides, it can be wound with cold insulating materials to prevent loss of cold energy. The length of neck (H, see the drawing on the left)depends on service temperature and the thickness of cold insulating material. When the seal effect of packing turns lower, fill in grease to form up oil seal layer in the middle of packing box(see combined packing structure)to lower the differential pressure of packing box and enhance the dependability of seal.

3,To serve a temperature below -100℃, the material of valve stem shall be treated with chromeplating or nitriding to enhance the surface hardness of valve stem and the dependability of packing.

4,Cryogenic ball valve takes a structure to avoid abnormal pressure rise. As the medium in cryogenic valve is gasified and rapidly expanded in Volume, the pressure will go extremely high. When the pressure in the middle cavity of valve rises, the middle cavity and the inlet side can be communicated, or a relief can be mounted at the inlet side of valve, thus to ensure the safe use of valves.

5,The gaskets used on cryogenic ball valves may function dependable seal and restoration under normal and cryogenic or under the conditions of temperature changes.

Technical Standard

Standard	GB	API
Design codes	GB/T 12227	ASME B16.34
Applications of cryoqenic technology	JB/T7794	BS6364
Pressure-temperature rating	GB/T12224	ANSI B16.34
Face to face dimension	GB/T12221	ASME B16.10
Flange	GB/T9113/HG20596	ASME B16.5
Test and Inspection	JB/T9092*	API598*

Cryogenic ball valves shall be subject to pressure test under low temperature after under normal temperature, with its principle is shown at the diaphram of cryogenic ball valves.

Main Parts and Materials

Part Name	Material
Body	Cast steel ,Cast stainless steel
Bonnet	Cast steel ,Cast stainless steel
Stem	Martensitic stainless steel ,Austenitic stainless steel
Ball	Martensitic stainless steel ,Austenitic stainless steel
Seal ring	Reintorced PTFE ,Carbon tibre ,PEEK

Dimensions of The Bonnet and Extended Stem of The Cryogenic Ball Valve(for Reference)

Nominal Size		Neck Dimension (mm)			Nominal Size		Pressure
DN	NPS	≥-60℃	≥-100℃	<-100℃	DN	in	PN1.6-10.0MPa 150Lb、300Lb
15	1/2	90	110	130	15	1/2	△/●
20	3/4	100	110	140	20	3/4	△/●
25	1	100	120	150	25	1	△/●
32	11/4	110	120	150	32	11/4	△/●
40	11/2	110	130	160	40	11/2	△/●
50	2	110	130	170	50	2	△/★/●
65	11/2	120	140	180	65	11/2	△/★/●
80	3	120	150	190	80	3	△/★/●
100	4	130	160	200	100	4	△/★/●
125	5	130	160	200	125	5	△/★/●
150	6	140	170	220	150	6	△/★/●
200	8	140	170	220	200	8	△/★/●
250	10	150	180	240	250	10	△/★/●
300	12	150	180	240	300	12	△/★/●
350	14	160	190	250	350	14	△/★/●
400	16	160	190	250	400	16	△/★/●

Note: ★Stands for electrical operated valves; △Stands for pneumatic operated valves;
●Stands for lever operated valves;
Those not covered in the table can be made according to users' requirements.

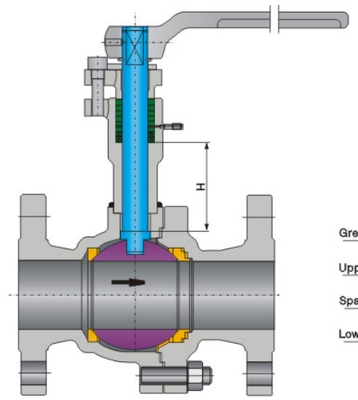

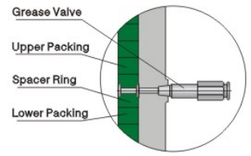

Double packing combination chart

Pressure Test of Ball Valve Under Cryogenic

According to the requiements of certain standards, the test of cryogenic ball valves shall be carried out under both normal and cryogenic. With its principle as following:

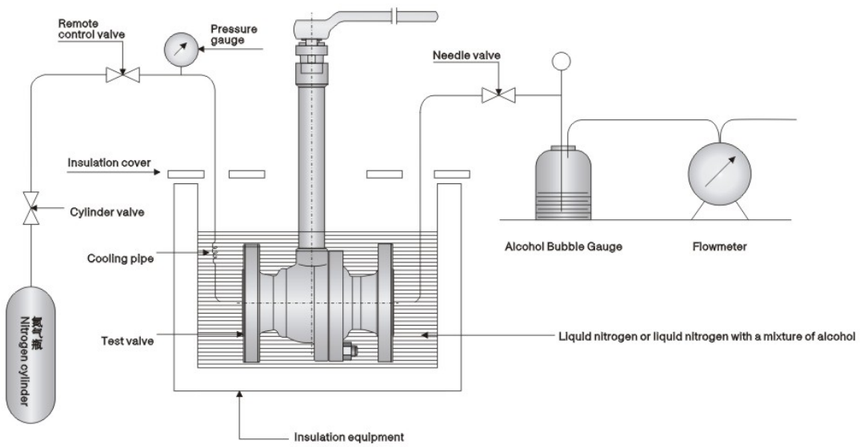

Cryogenic test device type

Main External Dimensions & Weight

The main overall connection dimensions of low temperature ball valve may be referred to side-mounted float ball valve and trunnion ball valve, with the height of valve being the height of the long neck added to that basis, so dimensions list is omitted here.

Parallel Expanding Hard Seal Ball Valve

Structural Features And Characteristics Of The Product

Softened metal two-way dual-seal valve is the company through years of practice, successfully developed a patented product, the use of ball-oriented column on the rope and hold the upper and lower disk guide slot of unequal spacing, through the support plate along the rope track down the two goals off flap hinged around the turn, so that the seal from the rotary/ rotary compression to achieve the effect of opening and closing. As shown: lift rod, driven by rising support plate along the guide rope columns move up, so that the sphere Shoulong, from the sealing surface, when the lifter to continue to rise, to stretch the rope disk drive ball 90 degrees, the valve open. Reverse the process so that the valve closes. Its main features are:

1, To completely sealing friction hoist torque small, seal and long life.
2, Two-way double seal structure. Double-sealed to seal more reliable, bi-directional compression, so that the flow valve installed from media influence.
3, The seat for the conical, spherical sealing surface of the ball core can be achieved by self-cleaning dust and particles can be applied to media.
4, Two from the pin structure, the guide pin and guide slot between the locking. Vice between the self-locking threaded stem, fully guaranteed core ball is not in the media back under pressure to maintain the seal between sealing pressure ratio can be a real zero leakage, API 6D and comply with national standard Grade A pipe sealing requirements.
5, The stem and the valve cover has a conical seal structure. When the valve opens, the stem is raised, form a seal, to replace the packing line. This is the other ball valve does not have.
6, The choice of some new and special materials, the valve can be applied to high temperature (> 800 ℃) low temperature (-196 ℃) high pressure (42.0MPa) and particulate media.
7, The purge function. In the valve cover / purge valve placed on the hole, the body's activities to keep clean and good performance.
8, Can be applied to different operating modes: manual, gear, pneumatic, hydraulic, Pneumatic, electric and remote control and automatic control, in order to adapt to different control requirements and mechanical and electrical integration.

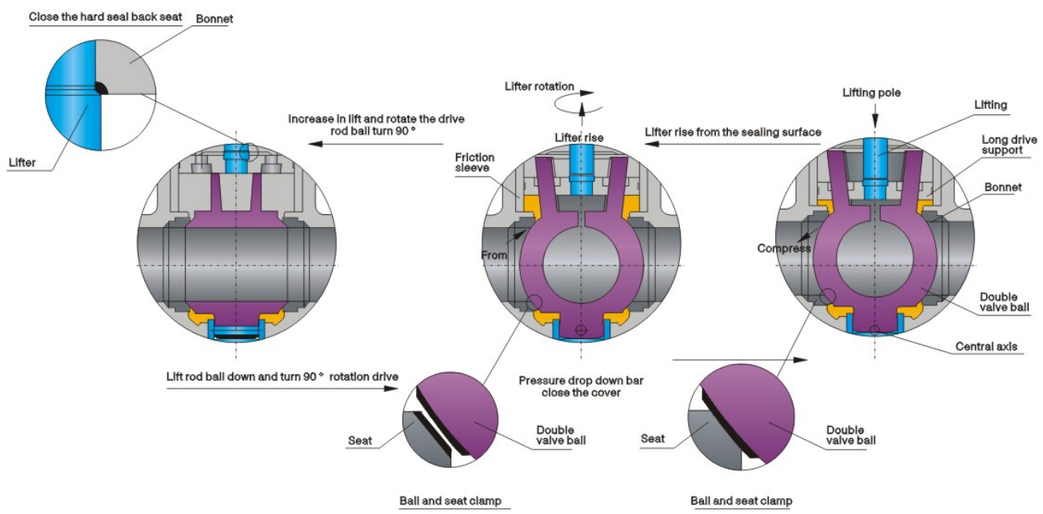

Parallel Expanding Hard Seal Ball Valve

Main Parts and Materials

Name \ Material	A216-WCB	A217-WC6	A217-WC9	A351-CF8	A351-CF3	A351-CF8M	A351-CF3M
Body,Bonnet	A216-WCB	A217-WC6	A217-WC9	A351-CF8	A351-CF3	A351-CF8M	A351-CF3M
Yoke	A216-WCB	A217-WC6	A217-WC9	A351-CF8	A351-CF3	A351-CF8M	A351-CF3M
Seat	A105+STL	A304+STL	A304+STL	A304+STL	A304L+STL	A316+STL	A316L+STL
Ball	A105+STL	A217-WC6+STL	A217-WC9+STL	A351-CF8+STL	A351-CF3+STL	A351-CF8M+STL	A351-CF3M+STL
Stem	A182 F6+HCr	17-4PH+HCr		A182 F304+HCr	A182 F304L+HCr	A182 F316+HCr	A182 F316L+HCr
Long drive support	A105+ER410	F11+STL	F22+STL	A304+STL	A304L+STL	A316+STL	A316L+STL
Bolt	A193-B7	A193-B16	A193-B16	A193-B8	A193-B8	A193-B8M	A193-B8M
Nut	A194-2H	A194-7	A194-7	A194-8	A194-8	A194-8M	A194-8M
Packing	Carbon fiber+304steel/flexible graphite			RTFE	RTFE	RTFE	RTFE
Stem nut	A493 D2						
Guide pin	40Cr with quenched treatment						
Cylinder liner	45+ENP	F321+ENP	F321+ENP	F321+ENP	F304L+ENP	F316+ENP	F316L+ENP
Bonnet gasket	304+flexibel graphite			316+RTFE			
Central axis	G40Cr			A182 F316+HCr			A182 F316L+HCr
Handwheel	A395(QT400-17)						
Suitable temperature (℃)	≤425℃	≤545℃	≤570℃	≤200℃	≤200℃	≤200℃	≤200℃
Suitable medium	water, gas, oil(contains some granular)			oxidation medium	Nitric acid medium	Acetic acid medium	Urea and Ammonia and etc

Note: When austenitic stainless steel for high temperature conditions, water, steam ≤ 800 ℃ packing, gasket should be carbon fiber +graphite/304

Parallel Expanding Hard Seal Ball Valve

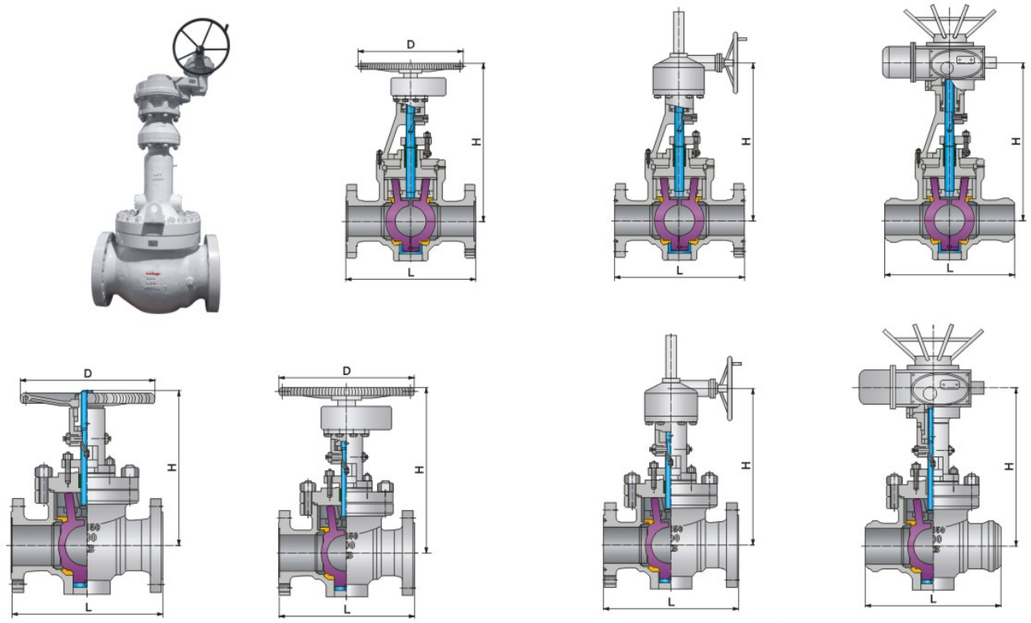

形式1　　形式2

Main External Dimensions

MPa	Type	DN	Dimensions			MPa	Type	DN	Dimensions			MPa	Type	DN	Dimensions		
			H	L	E				H	L	E				H	L	E
1.6	1	25	380	180	180	2.5	1	25	380	180	180	4.0	1	25	380	180	180
		32	380	180	180			32	380	180	180			32	380	180	180
		40	420	200	180			40	420	200	180			40	420	200	180
		50	490	230	200			50	490	230	200			50	490	230	200
		65	550	290	300			65	550	290	300			65	550	290	300
		80	600	310	300			80	600	310	300			80	600	310	300
		100	660	350	300			100	660	350	300			100	660	350	300
		150	705	480	400			150	705	480	400			150	705	480	400
		200	740	600	450			200	740	600	450			200	740	600	450
	2	250	910	730	310		2	250	910	730	310		2	250	910	730	310
		300	980	850	310			300	980	850	310			300	980	850	310
		350	1080	980	460			350	1080	980	460			350	1080	980	460
		400	1220	1100	460			400	1220	1100	460			400	1220	1100	460
		450	1340	1200	460			450	1340	1200	460			450	1340	1200	460
		500	1480	1250	460			500	1480	1250	460			500	1480	1250	460
		600	1820	1450	600			600	1820	1450	600			600	1820	1450	600
		700	1980	1650	600			700	1980	1650	600			700	1980	1650	600

Parallel Expanding Hard Seal Ball Valve

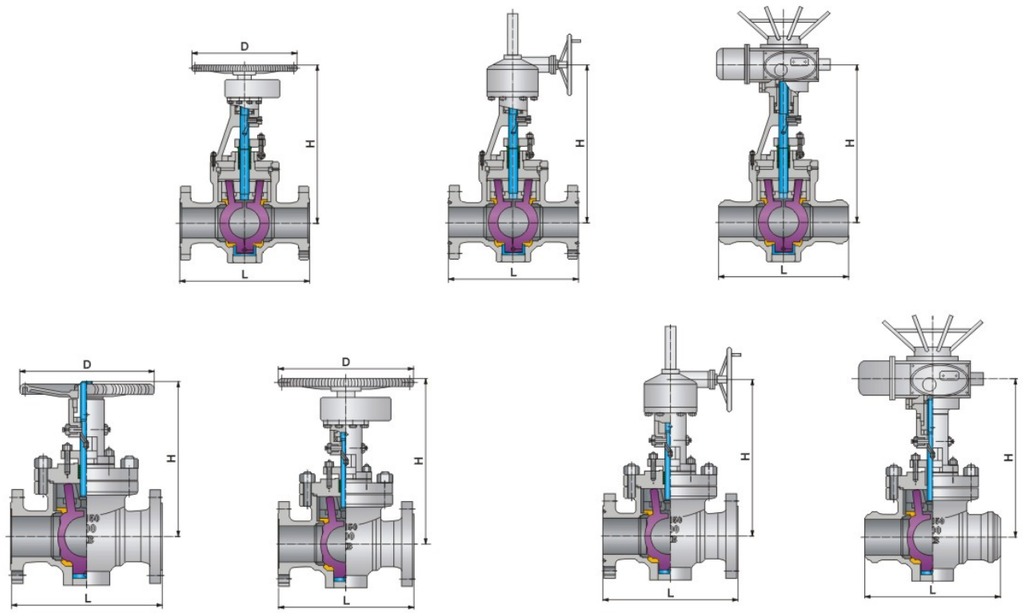

形式1　　形式2

Main External Dimensions

MPa	Type	DN	Dimensions			MPa	Type	DN	Dimensions			MPa	Type	DN	Dimensions		
			H	L	E				H	L	E				H	L	E
6.4	1	25	380	180	180	10.0	1	25	400	230	200	16.0	1	25	400	230	200
		32	380	180	180			32	400	260	200			32	400	260	200
		40	440	200	180			40	460	260	300			40	480	260	300
		50	510	230	200			50	530	300	300			50	550	300	300
		65	570	290	300			65	590	340	350			65	610	340	350
		80	620	310	300			80	645	380	400			80	665	380	400
		100	680	350	300			100	705	430	400			100	730	430	400
		150	725	480	400			150	750	550	450			150	775	550	450
	2	200	765	600	310		2	200	780	650	310		2	200	805	650	310
		250	935	730	310			250	965	775	310			250	990	775	310
		300	1010	850	460			300	1040	900	460			300	1065	900	460
		350	1110	980	460			350	1140	1025	460			350	1170	1025	460
		400	1250	1100	460			400	1280	1150	460			400	1310	1150	460
		450	1370	1200	460			450	1405	1275	460			--	--	--	--
		500	1520	1250	600			500	1555	1400	600			--	--	--	--
		600	1860	1450	600			600	1895	1650	600			--	--	--	--

Three Way Ball Valve

Ball Valve Purpose

Three way ball valves are used to switch, mix and divide the flow of corrosive or non corrosive liquid, gas or power mediums −46℃ ~ +200℃. Upon opening and closing, the smooth flow channel effects less pressure loss, making operation quite labor−saving and main tenance fairly easy. The five types of flow direction (figure on the right,1 for L−shaped and 4 for T−shaped) meet different technological requirements. It can be hand, pneumatic and electrically operated.

Structural Characteristics

1, Valve seat can be designed into four−side floating ball and trunnion ball, with smooth fluid state and reliable seal;
2, The structure may be designed into side installed type and top installed type ,with two way seal ,no series flow upon switch of flow direction;
3, Blow out proof design of valve stem;
4, Antistatic design;
5, Two position(ON and OFF)lockup design.

Technical Standard

Design Standard	GB/T12237
Face to Face Dimension	GB/T12221
Flanged End Dimension	GB/T9113
Test and Inspection	JB/T9092

Main Parts and Materials

Part Name	Material
Body	Cast steel , Cast stainless steel
Bonnet	Cast steel , Cast stainless steel
Stem	Martensitic stainless steel , Austenitic stainless steel
Ball	Martensitic stainless steel , Austenitic stainless steel
Seal ring	Reintorced PTFE ,Carbon tibre ,PEEK

Three Way Ball Valve

Diagram Of Medium Circulation Of The Three Ways Bal Valve

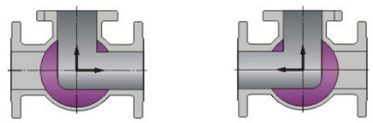

"L" type Ported

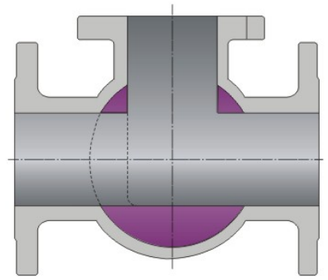

Real line:"T"type ported
Broden line:"L"type ported

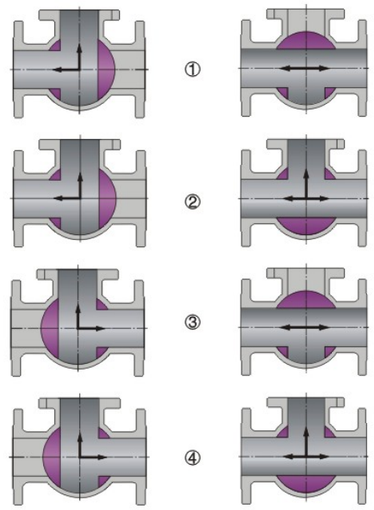

"T" type Ported

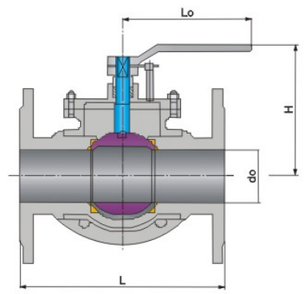

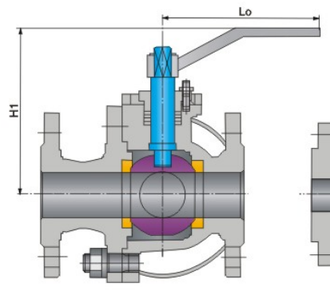

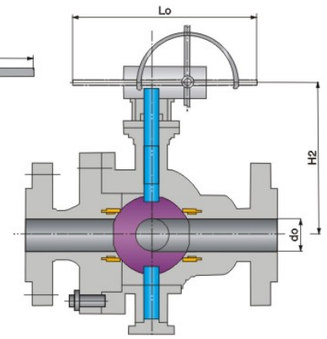

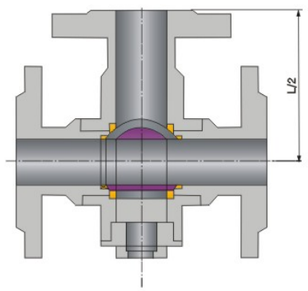

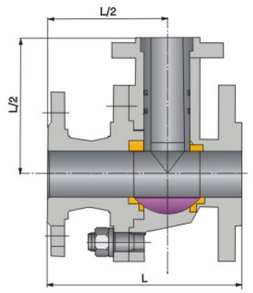

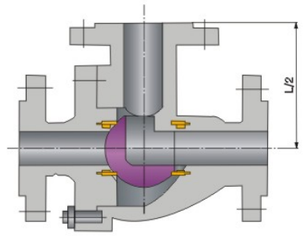

Three Way Ball Valve

Main External Dimensions

PN16/PN20/Class150

DN	NPS	L	d0	H	H1	H2	L0	W	Weight (kg)
15	1/2	140	13	90	70	--	160	--	3
20	3/4	150	15	106	86	--	230	--	4
25	1	160	25	109	88	--	230	--	6
32	$1^1/_4$	--	32	125	106	--	400	--	10
40	$1^1/_2$	210	38	149	132	--	400	--	14
50	2	220	51	154	137	--	400	--	20
65	$1^1/_2$	250	64	189	162	--	700	--	25
80	3	260	76	198	170	--	700	--	32
100	4	330	102	254	229	--	1050	--	45
125	5	430	127	273	247	--	1050	--	--
150	6	510	152	--	--	314	--	450	--
200	8	580	203	--	--	430	--	600	--
250	10	670	250	--	--	475	--	600	--

PN25/PN40/PN50/Class300

DN	NPS	L	d0	H	H1	H2	L0	W	Weight (kg)	
									PN2.5MPa	PN4.0MPa
15	1/2	140	13	90	70	--	160	--	3	3
20	3/4	150	15	106	86	--	230	--	4	4
25	1	160	25	109	88	--	230	--	6.5	6.5
32	$1^1/_4$	--	32	125	106	--	400	--	11	11
40	$1^1/_2$	210	38	149	132	--	400	--	15	15
50	2	220	51	154	137	--	400	--	21.5	21.5
65	$1^1/_2$	250	64	189	162	--	700	--	--	--
80	3	260	76	198	170	--	700	--	35	35
100	4	330	102	254	229	--	1050	--	49	49
125	5	430	127	273	247	--	1050	--	--	--
150	6	510	152	--	--	314	--	450	--	--
200	8	580	203	--	--	430	--	600	--	--
250	10	670	250	--	--	475	--	600	--	--

Four Way Ball Valve

Function

Four-way ball valve is also called multi-way water servicerotay valve in power station , and air reversing change over valve in petroch-emical system . They are applicable for circulating system of liquid , gas , dust ,slurry and medium containing solid particles . For example ,the forward and reverse circulating water supply system of unit cooler in power station. The conventional piping for forward and reverse circulating water supply has the defects of large occupation , high cost , complicated operation (to operate four valves for each change over), for forward water supply , valve 1 and 3 to be opened and valve 2 and 4 to be closed, for reverse water supply , valve 2 and 4 to be opened and valve 1 and 3 to be closed.(See figure 1).Use of four-way ball valve in stead of the conventional piping and valve guoup can simplify operational procedures , lower the cost , facilitate the control and improve its asynchronism . (See figure 2).

Structural features

1,Designed to meet the process of forward and reverse water supply of coolers in electric power system, with suitable and dependable functions ;
2,Top mounted fixed ball four-side seated valve core , with sound sealing performance , resistance to sand abrasion , and long service life;
3,Electric and pneumatic operation (switched to hand operation if necessary)
4,Facilitated control.Good information channel and operating interface between control cabinet and valve , and upper-level machine . If requested , automatic switch over of forward and reverse water supply may be actualized by a certain interval .

Control system

Four-way ball valve can be controlled on the scene or through the operating of the central system for a remote controlling. The function is as below:

One,switch

1, Power switch
2, Field control /Remote control change over switch
3, Manual circulation /Automatic circulation change over switch

Two,button

1,Forward water supply
2,Reverse water supply
3,Pause

Electrical parameters:
Power supply AC 280V/50HZ, ambient temperature -20℃ ~ +40℃
Relative humidity=90% (25℃) ,level of protection IP67

Three, Indicator light

1,Power indicator
2,Forward water supply indicator
3,Reverse water supply indicator
4,Middle position pause indicator
5,Valve or electric fitting jammed over-moment indicator(flash and alarm)

Four ,opening indicator

Five, communication with upper machine

Four Way Ball Valve

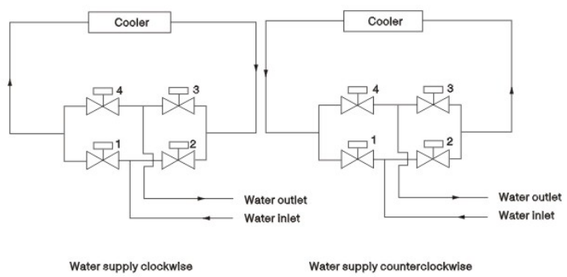

Figure1

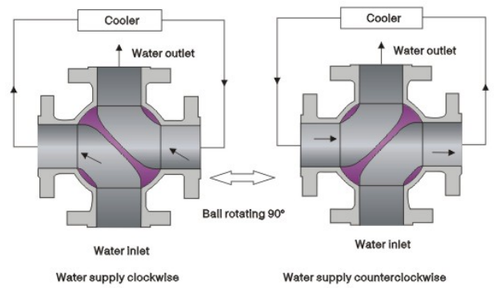

Figure2

Technical Standard

Design Standard	GB/T12237
Face to Face Dimension	GB/T12221
Flanged End Dimension	GB/T9113
Test and Inspection	JB/T9092

Main Parts and Materials

Part Name	Material
Body	Cast steel , Cast stainless steel
Bonnet	Cast steel , Cast stainless steel
Stem	Martensitic stainless steel , Austenitic stainless steel
Ball	Martensitic stainless steel , Austenitic stainless steel
Seal ring	Special plastic

Four Way Ball Valve

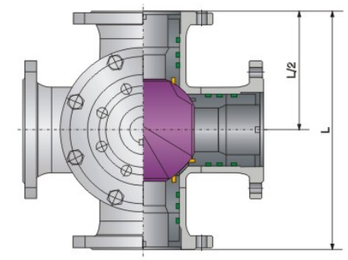

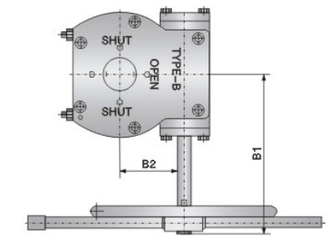

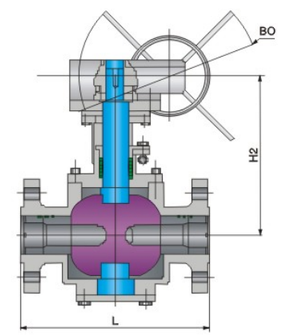

4-way ball valve
with gear operator

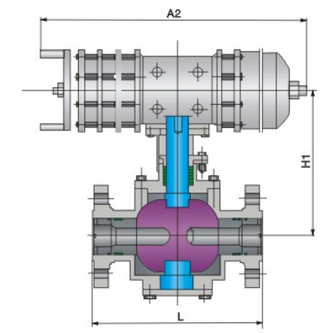

4-way ball valve
with pneumatic actuator

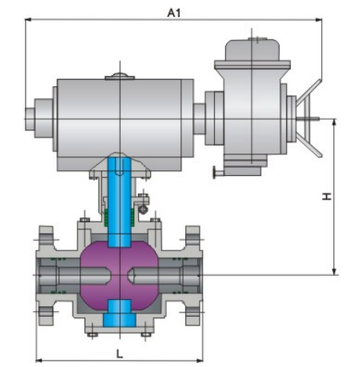

4-way ball valve
with electric actuator

Main External Dimensions

PN1.0、1.6Mpa

DN	NPS	L	D0	H	A1	H1	A2	H2	BO	B1	B2	Weight (Kg)
50	2	265	51	220	433	217	405	200	250	106	52	28
65	21/2	280	64	295	433	248	405	260	250	106	52	48
80	3	310	76	367	433	335	574	320	250	106	52	87
100	4	370	102	440	520	412	574	400	300	143	80	137
125	5	440	127	535	520	495	756	500	300	143	80	240
150	6	510	152	660	520	613	756	600	400	200	108	270
200	8	580	203	870	520	824	756	800	400	200	108	585
250	10	665	250	1080	896	1025	1060	1000	600	200	108	765
300	12	760	305	1200	896	1176	1060	1160	600	200	108	1121
350	14	850	337	1250	896	1239	1360	1225	800	330	140	1450
400	16	940	387	1420	910	1388	1360	1350	800	330	140	1780
450	18	1050	438	1610	910	1596	1360	1575	800	330	140	2435
500	20	1180	489	1830	910	1725	2910	1750	1000	370	220	3108

Four Way Ball Valve

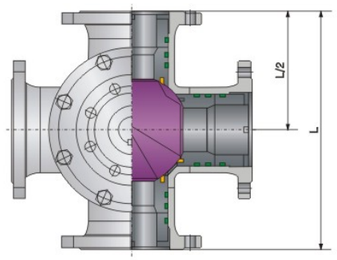

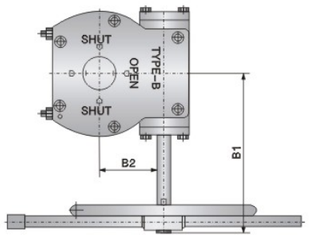

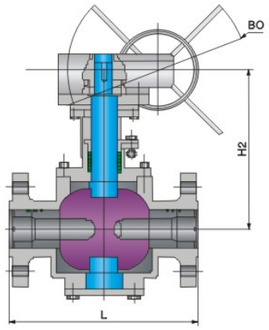

4-way ball valve
with gear operator

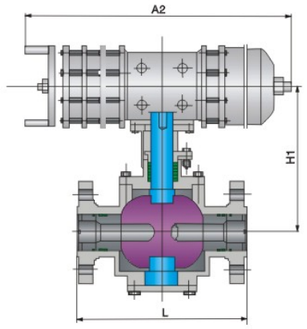

4-way ball valve
with pneumatic actuator

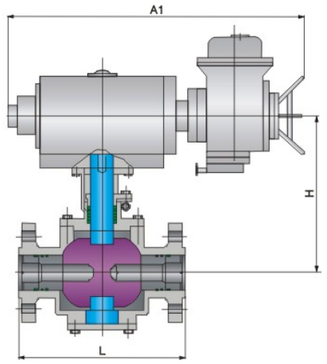

4-way ball valve
with electric actuator

Main External Dimensions

Class 150

DN	NPS	L	D0	H	A1	H1	A2	H2	BO	B1	B2	Weight (Kg)
50	2	265	51	390	433	217	405	200	250	106	52	28.5
65	21/2	280	64	420	433	248	405	260	250	106	52	49
80	3	350	76	490	520	335	574	320	250	106	52	87
100	4	420	102	570	520	412	574	400	300	143	80	139
125	5	490	127	680	520	495	756	500	300	143	80	240
150	6	580	152	830	896	613	756	600	400	200	108	270
200	8	640	203	1020	896	824	756	800	400	200	108	585
250	10	740	250	1140	896	1025	1060	1000	600	200	108	765
300	12	820	305	1220	896	1176	1060	1160	600	200	108	1125
350	14	910	337	1390	910	1239	1360	1225	800	330	140	1455
400	16	1000	387	1580	910	1388	1360	1350	800	330	140	1785
450	18	1150	438	1790	910	1596	1360	1575	800	330	140	2467
500	20	1300	489	1960	936	1725	2910	1750	1000	370	220	3150

Threaded Ends Ball Valve

Product design features

The series of the threaed ends ball valves are mainly used in the epuipment for sea prospecting, which takes helium as medium, and also applied to the system which takes water, oil, acid etc, as medium, for cutting or releasing the gas or liquid.

The main features of construction
1, Compact construction, light weight, little flow resistance.
2, Quick start and stop, excellent seal performance.
3, The type of construction divided into one-side type, two-side type, three-side type. and the parts be maintained and changedconveniently.
4, Two sides are connected with pipe by internal and outer threaed screw. Installed quickly.
5, Can provide different type of connecting ends on the right or left side, according to user's demand.
6, Can set up the corresponding electric or pneumatic installations for remote control or automatic control, according to user's demand.

Technical Specification

Face to Face	**Female Threaded Connection**	**GB/T12221**
	Male Threaded Connection	**GB/T12221**
Female threaded connection		GB/T7073
Male threaded connection		JB/T1752、JB/T1754、JB/T1755
Test and Inspection		JB/T9092

Specification standard

Pressure		**Nominal Pressure**		
		1.6	**2.5**	**4.0**
Test pressure (MPa)	Shell test	2.4	3.75	6.0
	Sealing test	1.76	2.75	4.4
Service temperture		-29℃~121℃ Different raw material for different work temperature)		
Service medium		Water, oil, gas and other corrosive medium		

Main Parts and Materials

No.	**Part Name**	**Material**	
		GB	**ASTM**
1	Body	WCB CF8、CF8M、CF3、CF3M	A216-WCB、A351-CF8、CF8M、CF3、CF3M
2	Bonnet	WCB CF8、CF8M、CF3、CF3M	A216-WCB、A351-CF8、CF8M、CF3、CF3M
3	Ball	1Cr13、0Cr18Ni9、1Cr18N12Mo2Ti	A276-410、304、316、304L、316L
4	Stem	1Cr13、0Cr18Ni9、1Cr18N12Mo2Ti	A276-410、304、316、304L、316L
5	Sealing ring	尼龙、对位聚苯 Nylon PTFE、RTFE	PTFE、PTFE、尼龙、对位聚苯

Notes:The materials of main parts and sealing ring can be chosen according to actual working condition and customer's special requirement.

Threaded Ends Ball Valve

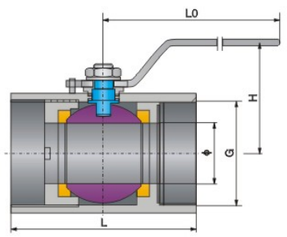

One pc female threaded ball valve

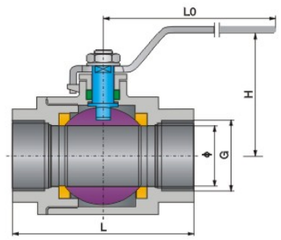

Two pc female threaded ball valve

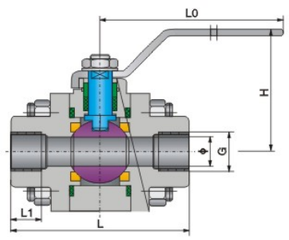

Three pc female threaded ball valve

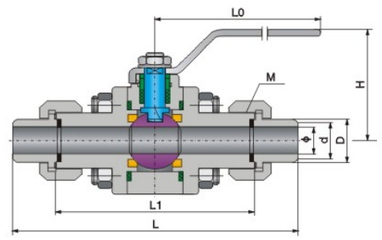

Three pc male threaded ball valve

Main External Dimensions

Female threaded connection

DN (mm)	One-sided type					Two-sided type					Three-sided type					
	ϕ	G	L	L0	H	ϕ	G	L	L0	H	ϕ	G	L	L1	L0	H
6	4.2	1/4	40	80	22	10	1/4	55	95	42	--	--	--	--	--	--
10	6	3/8	45	80	26	10	3/8	55	95	42	12	3/8	65	12	95	46
15	8	1/2	57	88	31	15	1/2	64	108	51	15	1/2	75	14	110	46
20	12	3/4	60	88	34	20	3/4	75	115	58	20	3/4	85	16	110	54
24	15	1	72	105	38	25	1	85	135	77	25	1	90	18	140	65
32	19	1 1/4	79	105	43	32	1 1/4	102	150	83	32	1 1/4	112	20	140	69
40	24	1 1/2	85	124	50	38	1 1/2	108	175	97	38	1 1/2	120	22	155	76
50	32	2	101	124	57	50	2	124	190	106	50	2	145	24	180	86
65	--	--	--	--	--	65	2 1/2	163	220	122	65	2 1/2	170	28	220	120
80	--	--	--	--	--	80	3	185	250	133	80	3	200	32	260	150

Male threaded connection

DN (mm)	Male Threaded Connection							
	ϕ	d	D	L	L1	L0	M	H
6	8	10	14	150	85	96	20×1.5	57
10	10	12	18	150	85	96	24×1.5	57
15	15	17	22	175	108	110	30×2	68
20	20	22	28	190	120	120	36×2	70
25	25	27	33	200	132	135	42×2	80
32	32	34	40	230	158	160	52×2	84

Double Block and Bleed Valve

Technical Specifications

Design Basis		API		ASME	
Design Standard		API 6D		ASME B16.34	ASME VIII
Face-to-Face		ASME B16.10[a]	API 6D[a]	ASME B16.10[a]	
Connection End	Flanged	ASME B16.5			
	Butt-Welding	ASME B16.25			
Material		NACE MR0175			
Test and Inspection		API 598	API 6D	ASME B16.34	
Fire Test		API 6FA/API 607			

a. The dimension is determined by the manufacturer and some products are conformed to this standard;
If you want detailed dimensions of our products, please contact with the manufacturer.

Designing Features

- Full bore design
- One piece body construction
- Blow out protection stem design
- Zero-leakage
- Forged steel body design
- Double-block and bleed function
- Single piston design
- Seat is available with double piston design
- Fire-proof design
- Anti-static design
- Optional cryogenic application
- Optional fully welding design
- Optional soft or hard sealing design
- Maintenance-free design

Double Block and Bleed Valve

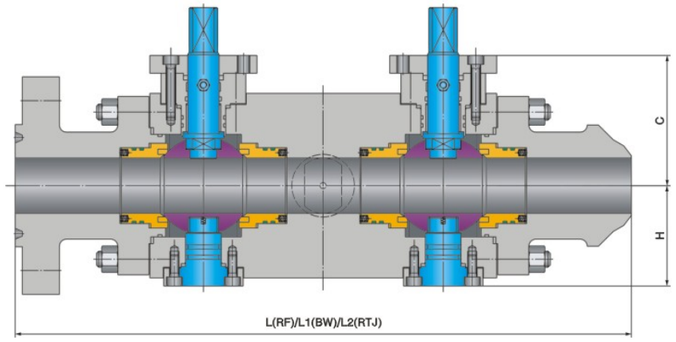

Bare Stem with Mounting Pad

Main External Dimensions

Class 150

DN	NPS	L (RF)	L1 (BW)	L2 (RTJ)	C	H	KG
50	2	312	378	334	105	98	37
80	3	355	495	378	130	127	75
100	4	401	534	422	150	165	150
150	6	690	800	711	237	235	207
200	8	800	912	823	288	239	300
250	10	933	978	956	326	277	480
300	12	1068	1111	1089	364	316	690
350	14	1201	1334	1223	395	341	923
400	16	1334	1467	1356	437	383	1312
450	18	1512	1600	1533	471	417	1582
500	20	1600	1734	1622	508	454	2033
600	24	1867	2000	1890	590	529	3164
650	26	2000	2179	--	675	623	3500
700	28	2179	2356	--	718	666	4046
750	30	2266	2445	--	756	699	4795
800	32	2401	2667	--	752	713	5403
850	34	2578	2846	--	824	732	6600
900	36	2667	3022	--	881	785	7626
1000	40	2975	3325	--	998	900	10063
1050	42	3150	3500	--	1058	976	11563
1200	48	3588	3894	--	1106	1035	14027

Class 300

DN	NPS	L (RF)	L1 (BW)	L2 (RTJ)	C	H	KG
50	2	378	378	406	120	102	42
80	3	495	495	522	164	148	80
100	4	534	534	562	165	165	170
150	6	705	800	733	237	206	265
200	8	879	912	907	288	239	350
250	10	994	978	1022	326	277	530
300	12	1134	1111	1162	364	316	764
350	14	1334	1334	1362	395	341	1055
400	16	1467	1467	1495	437	383	1476
450	18	1600	1600	1628	486	432	2041
500	20	1734	1734	1768	532	478	2693
600	24	2000	2000	2039	640	578	3164
650	26	2179	2179	2223	675	612	3512
700	28	2356	2356	2401	700	648	4108
750	30	2445	2445	2489	735	670	5007
800	32	2667	2667	2718	775	713	5700
850	34	2846	2846	2895	844	759	6712
900	36	3022	3022	3073	899	811	7711
1000	40	3115	3535	--	1006	920	10068
1050	42	3290	3658	--	1064	1013	12213
1200	48	3806	4086	--	1139	1088	15067

Double Block and Bleed Valve

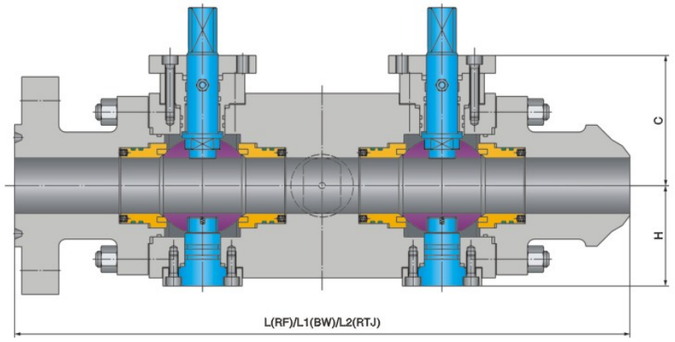

Bare Stem with Mounting Pad

Main External Dimensions

Class 600

DN	NPS	L (RF)	L1 (BW)	L2 (RTJ)	C	H	KG
50	2	511	511	516	129	105	45
80	3	623	623	628	164	147	80
100	4	756	756	761	184	165	210
150	6	978	978	984	237	212	315
200	8	1155	1155	1162	304	254	500
250	10	1377	1377	1384	359	303	900
300	12	1467	1467	1472	378	330	1067
350	14	1556	1556	1561	414	360	1352
400	16	1734	1734	1740	455	401	1993
450	18	1911	1911	1916	503	449	2625
500	20	2090	2090	2100	543	485	3384
600	24	2445	2445	2462	646	584	5577
650	26	2534	2534	2557	670	614	6530
700	28	2711	2711	2734	618	643	7542
750	30	2889	2889	2912	642	682	9139
800	32	3112	3112	3140	673	724	10505
850	34	3378	3378	3406	615	769	12149
900	36	3645	3645	3673	654	806	14137

Class 900

DN	NPS	L (RF)	L1 (BW)	L2 (RTJ)	C	H	KG
50	2	644	644	649	129	108	58
80	3	667	667	672	164	147	85
100	4	800	800	805	184	165	258
150	6	1068	1068	1073	237	212	360
200	8	1290	1290	1295	304	254	580
250	10	1467	1467	1472	359	303	990
300	12	1689	1689	1694	398	345	1347
350	14	1801	1801	1817	410	358	1483
400	16	1878	1878	1995	458	407	2071
450	18	2133	2133	2156	502	452	2845
500	20	2312	2312	2335	553	498	3719
600	24	2711	2711	2744	664	597	6471

Class 1500

DN	NPS	L (RF)	L1 (BW)	L2 (RTJ)	C	H	KG
50	2	644	644	649	129	105	58
80	3	823	823	828	164	147	120
100	4	956	956	961	184	165	200
150	6	1234	1234	1244	280	260	495
200	8	1456	1456	1472	332	283	790
250	10	1734	1734	1750	399	349	1350
300	12	1978	1978	2006	431	387	1959
350	14	2200	2200	2233	482	421	2618
400	16	2422	2422	2462	540	474	3634
450	18	2690	2690	2728	628	570	5728
500	20	2912	2912	2951	725	690	8584
600	24	3400	3400	3451	780	733	13639

Class 2500

DN	NPS	L (RF)	L1 (BW)	L2 (RTJ)	C	H	KG
50	2	789	789	795	177	144	165
80	3	1012	1012	1022	203	187	280
100	4	1178	1178	1195	271	250	356
150	6	1600	1600	1622	300	280	800
200	8	1789	1789	1817	485	475	3070
250	10	2223	2223	2261	505	502	3584
300	12	2489	2489	2529	547	514	4500

High Pressure Butt-welding Forged Steel Ball Valve

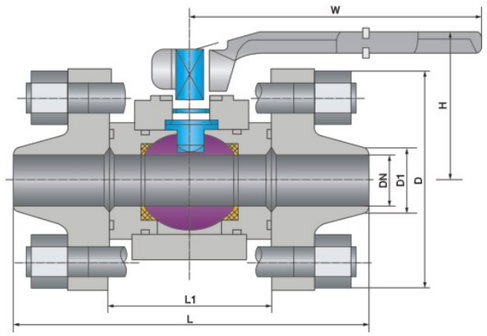

Usage and Feature

High pressure butt welding forged steel ball valve is used in pipeline of fertilizer and hydraulic system. The valve has the characteristic of having a compact construction, quick switch, low resistance and easy to be maintained.

Structure Feature

3 pieces construction is used in the valve, and it's produced with the forged steel, and the valve has a welding connection. The body connects each other by bolt connection in case to change one of the parts according to the user's request.

Main External Dimensions

PN16.0MPa

DN	L	L1	D	D1	H	W	WT(Kg)
10	150	60	90	18	58	220	4
15	170	70	100	23	62	220	4
20	191	81	110	29	75	250	6.5
25	205	95	115	36	80	250	8
32	230	110	150	43	96	300	16
40	260	120	170	49	111	400	22.5
50	330	140	200	61	128	400	35
65	360	150	225	80	180	500	44
80	380	160	270	105	200	600	78
100	430	188	320	118	245	800	120

PN32.0MPa

DN	L	L1	D	D1	H	W	选配气装 P.A.	WT(Kg)
10	150	60	90	18	211	250	QD60	12
15	170	70	100	23	293	348	QD100	18
20	191	81	110	29	297	348	QD100	20
25	205	95	115	36	303	348	QD100	22
32	230	110	150	43	456	520	QD150	40
40	260	120	170	49	463	520	QD150	49
50	330	140	200	61	478	520	QD150	61
65	360	150	225	80	180	500	–	–
80	380	160	270	105	200	600	–	–
100	430	188	320	118	245	800	–	–

Wafer Type Ball Valve

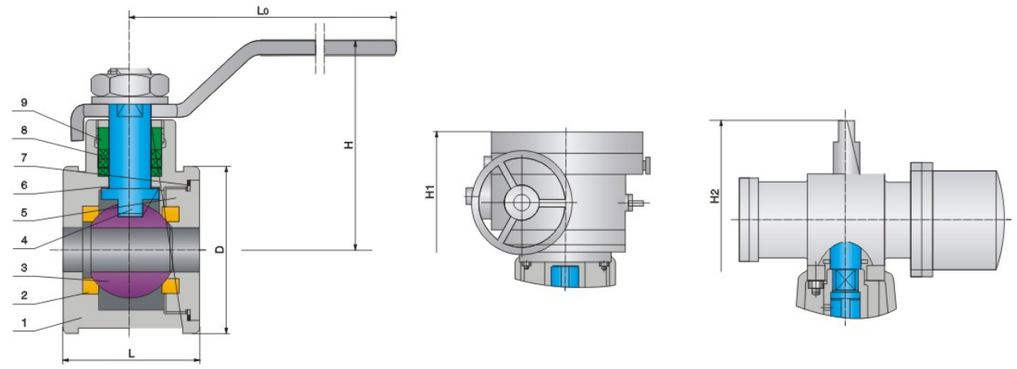

Technical Specification

Structure form	Wafer type
Flanged ends	ANSI B 16.5、GB/T9113
Driving manner	Lever operated, Electroc driving, Peneumatic operated
Test and Inspection	API 598

Main Parts and Materials

序号 No.	Part Name	Material GB	Material ASTM	No.	Part Name	Material GB	Material ASTM
1	Body	CF8	A351-CF8	6	Gasket	PTFE、RTFE	
2	Sealing ring	Nylon PTFE、RTFE		7	Gasket	Graphite+stainless steel	
3	Ball	0Cr18Ni9+ENP	A276-304+ENP	8	Packing	Graphite	
4	Stem	0Cr18Ni9	A276-304	9	Stuffing cover	0Cr18Ni9	A276-304
5	Seat	0Cr18Ni9	A276-304	--	--	--	--

Notes:The materials of main parts and sealing ring can be chosen according to actual working condition and customer's special requirement.

Main External Dimensions

PN1.0~2.5MPa Class150

DN(mm)	NPS(in)	L	D PN1.0 1.6MPa	D PN2.5MPa	D PN2.0MPa Class150	Lever Operated H	Lever Operated L0	Electric Driving H1	Electric Driving Electric Driving Device	Peneumatic Operated H2	Peneumatic Operated Air-operating Device
15	1/2	40	53	53	47	82	140	324	Q45-1	228	AG06
20	3/4	45	63	63	57	82	180	323	Q45-1	228	AG06
25	1	50	73	73	66	104	180	345	Q45-1	238	AG09
32	$1^1/_4$	60	84	84	75	113	200	354	Q245-1	263	AG09
40	$1^1/_2$	70	94	94	85	122	200	363	Q60-1	275	AG09
50	2	80	109	109	103	132	250	373	Q60-1	284	AG13
65	$2^1/_2$	110	129	129	122	144	300	385	Q60-1	365	AG13
80	3	120	144	144	135	155	350	455	Q60-1	382	AG13
100	4	140	164	170	173	183	450	495	Q60-1	425	AW17

Wafer Type Thin Ball Valve

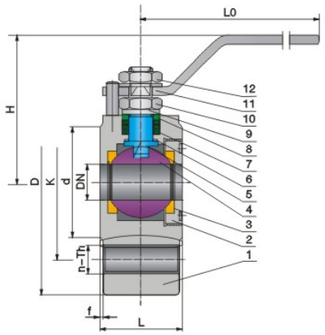

DN≤25

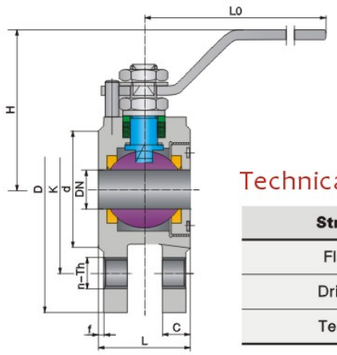

DN≥32

Technical Specification

Structure form	Wafer type
Flanged ends	ASME B16.5, JB/T79
Driving manner	Wrench
Test & Inspection	API 598

Main Parts and Materials

No.	Part Name	Material		No.	Part Name	Material	
		GB	ASTM			GB	ASTM
1	Body	CF8	A351-CF8	7	Packing	Graphite	
2	Seat	0Cr18Ni9	A276-304	8	Stuffing cover	0Cr18Ni9	A276-304
3	Sealing ring	Nylon PTFE、RTFE		9	spring lock washers	0Cr18Ni9	A276-304
4	Ball	0Cr18Ni9+ENP	A276-304+ENP	10	Lock nut	0Cr18Ni9	A276-304
5	Stem	0Cr18Ni9	A276-304	11	Wrench	0Cr18Ni9	A276-304
6	Gasket	PTFE		12	Pin	0Cr18Ni9	A276-304

Notes:The materials of main parts and sealing ring can be chosen according to actual working condition and customer's special requirement.

Main External Dimensions

PN1.0~2.5MPa Class150

DN	L	PN1.6MPa					PN2.5MPa					PN4.0MPa					f	H	L0
		D	K	d	C	n-Th	D	K	d	C	n-Th	D	K	d	C	n-Th			
10	32	85	60	42	--	4-M12	85	60	42	--	4-M12	85	60	42	--	4-M12	2	80	150
15	32	90	65	47	--	4-M12	90	65	47	--	4-M12	90	65	47	--	4-M12	2	80	150
20	38	100	75	58	--	4-M12	100	75	58	--	4-M12	100	75	58	--	4-M12	2	85	150
25	42	110	85	68	--	4-M12	110	85	68	--	4-M12	110	85	68	--	4-M12	2	95	170
32	50	130	100	78	16	4-M16	130	100	78	16	4-M16	130	100	78	18	4-M16	2	100	180
40	60	140	110	88	16	4-M16	140	110	88	16	4-M16	140	110	88	18	4-M16	2	105	210
50	70	155	125	102	18	4-M16	155	125	102	18	4-M16	155	125	102	20	4-M16	2	115	230
65	94	180	145	125	20	4-M16	180	145	125	22	8-M16	180	145	125	22	8-M16	2	130	280
80	118	195	160	138	20	8-M16	195	160	138	24	8-M16	195	160	138	24	8-M16	2	145	300
100	140	215	180	160	22	8-M16	230	190	160	24	8-M20	230	190	160	24	8-M20	2	175	400
125	195	245	210	188	22	8-M16	270	220	188	26	8-M24	270	220	188	26	8-M24	2	190	500
150	225	280	240	212	24	8-M20	300	250	212	28	8-M24	300	250	212	28	8-M24	2	220	600
200	275	335	295	266	24	8-M22	360	310	274	30	8-M24	375	320	285	34	8-M27	2	260	700

2PC Full Bore Class 800 Forged Steel Ball Valve

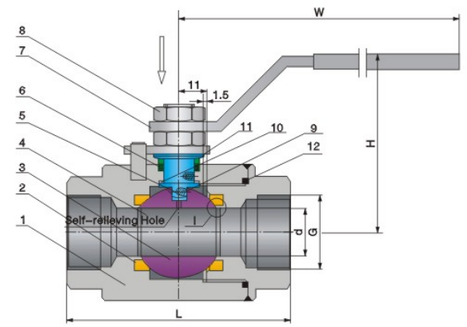

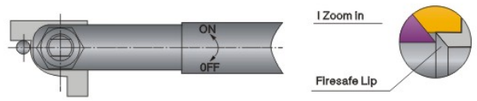

Feature

- 2PC Body full bore
- Design and manufacture: BS 535
- Test and inspection: API598
- Size: 1/2''to2''
- Anti-static
- Working Pressure: class800(2000psi)
- Fire safe
- Threaded End BSPT, NPT, DIN29999

Main Parts and Materials

No.	Part Name	Material
1	Boby	A105N F316
2	Seat	PTFE
3	Ball	316
4	Cap	A105N F316
5	Stem	316
6	Packing	Graphite
7	Handle	304
8	Stem nut	304
9	Anti static	SS304
10	Stem sealing	PTFE
11	Gland	SS316
12	Gasket	Graphite

Main External Dimensions

NPS	ϕd	G	L	H	W
1/4	6	1/4''-18NPT	60	55	120
3/8	10	3/8''-18NPT	60	60	120
1/2	12.7	1/2''-14NPT	75	65	150
3/4	17.5	3/4''-14NPT	80	72	150
1	22	1''-11-1/2NPT	90	80	170
$1^1/_4$	28.5	$1^1/_4$''-11-1/2NPT	110	80	170
$1^1/_2$	35	$1^1/_2$''-11-1/2NPT	120	105	240
2	47.5	2''-11-1/2NPT	140	114	240

2PC Full Bore Class 1500 Forged Steel Ball Valve

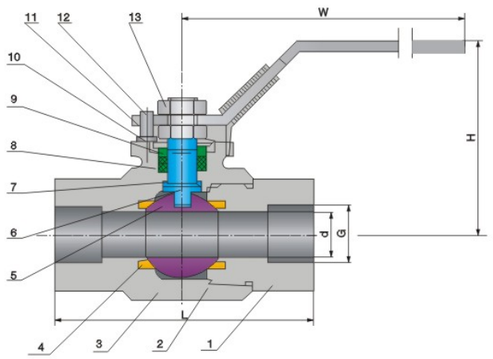

Feature

- 2PC Body full bore
- Design and manufacture: ANSI B16.34
- Test and inspection: API 598
- Size 1/4''to 2''
- Anti-static
- Working pressure class 1500(3000psi)
- Fire safe
- Threaded end: BSPT, NPT, DIN2999
- ISO5211 Mounting pad

Main Parts and Materials

No.	Part Name	Material
1	Bonnet	A105 SS304 SS316
2	Seal Gasket	PTFE
3	Body	A105 SS304 SS316
4	Seat	Delrin
5	Ball	SS316
6	Stem	SS630(17-4PH)
7	Stem sealing	RPTFE
8	Packing	PTFE OR NYLON
9	Packing gland	SS304
10	Stem washer	SS304
11	Handle	SS304
12	Stopin	SS304
13	Nut	SS304

Main External Dimensions

NPS	d	G	L	H	W	Square (thick) mouth	The center circle of the screw hole Dim"Go to the platform (ISO5211pad)	N-M
1/4	9	1/4-18NPT	102	62	170	46(6)	ϕ42	4-M6
3/8	9	3/8-18NPT	102	62	170	46(6)	ϕ42	4-M6
1/2	13	1/2-14NPT	102	62	170	46(6)	ϕ42	4-M6
3/4	19	3/4-14NPT	110	90	170	46(6)	ϕ50	4-M6
1	25	1-11.5NPT	114	90	170	46(6)	ϕ50	4-M6
1 1/2	38	--	133	125	280	65(8)	ϕ70	4-M8
2	50	2-11.5NPT	159	142	300	65(8)	ϕ70	4-M8

2PC Full Bore Class 1500 Forged Steel Ball Valve

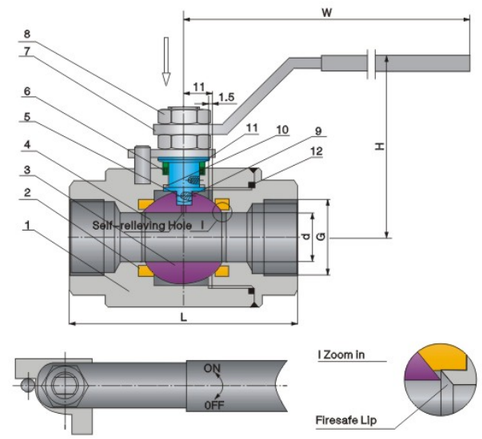

Feature

- 2PC Body full bore
- Design and manufacture: API 608
- Test and inspection: API 598
- Size: 1/4''to3''
- Anti-static
- Working Pressure: class1500(3000psi)
- Fire safe
- Threaded End BSPT, NPT, DIN29999
- Face to face: DIN3202

Main Parts and Materials

No.	Part Name	Material
1	Boby	A105N F316
2	Seat	PTFE
3	Ball	316
4	Cap	A105N F316
5	Stem	316
6	Packing	Graphite
7	Handle	304
8	Stem nut	304
9	Anti static	SS304
10	Stem sealing	RPTFE
11	Gland	316
12	Gasket	Graphite

Main External Dimensions

NPS	d	G	L	H	W
1/4	6	1/4-18NPT	70	55	120
3/8	9	3/8-18NPT	75	58	140
1/2	13	1/2-14NPT	85	65	160
3/4	19	3/4-14NPT	95	76	180
1	25	1-11.5NPT	105	84	200
1 1/4	32	1.25-11.5NPT	120	105	235
1 1/2	38	1.5-11.5NPT	130	118	250
2	50	2-11.5NPT	150	138	300
2 1/2	65	2.5-8NPT	190	142	400
3	76	3-8NPT	220	176	500

3PC Full Bore Class 800 Forged Steel Ball Valve

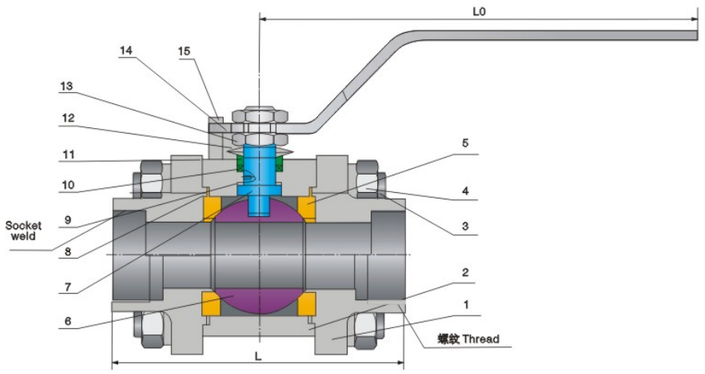

Main Parts and Materials

No.	Part Name	CS ASTM	SS ASTM	
		Type A105N	Type F304(L)	Type F316(L)
1,2	Body/Bonnet	ASTM A105N	A182 F304(L)	A182 F316(L)
3	Bolt	A193 B7	A193 B8	A193 B8M
4	Nut	A194 2H	A194 8	A194 8M
5,8	Seal ring/Gasket	PTFE、PPL/PTFE、304+GRAPHITE		
6	Ball Body	A182 F304	A182 F304 (L)	A182 F316 (L)
7	-Stem	A182 F410	A182 F304 (L)	A182 F316 (L)
9,10	Stem Packing	PTFE/PTFE、GRAPHITE		
11	–Gland	A182 F410	A182 F304 (L)	A182 F316 (L)
12	Spring	65Mn		
13	Nut	A194 B7	A194 8	A194 8
14	Handle	Q235A		
15	Pin	A194 B7	F316	F316

Main performance parameter

Nominal Pressure		900LB	1500LB
Testpressure	Strength test	22.7	37.8
	Seat test	16.7	28.1
	Gas seal test	0.6	0.6
Maximum operating temperature	Nylon <80℃，PTFE<150℃，PPL<220℃		
Suitable Medium			

Main External Dimensions

Dimensions / Size	L	S	B	L0	NPT
1/2"	92	21.8	9.6	123	1/2"
3/4"	111	27.1	12.7	160	3/4"
1"	127	33.8	--	160	1"
1 1/4"	140	42.8	12.7	195	1 1/4"
1 1/2"	152	48.7	12.7	195	1 1/2"
2"	178	61.1	15.9	250	2"

3PC Full Bore Class 1500 Forged Steel Ball Valve

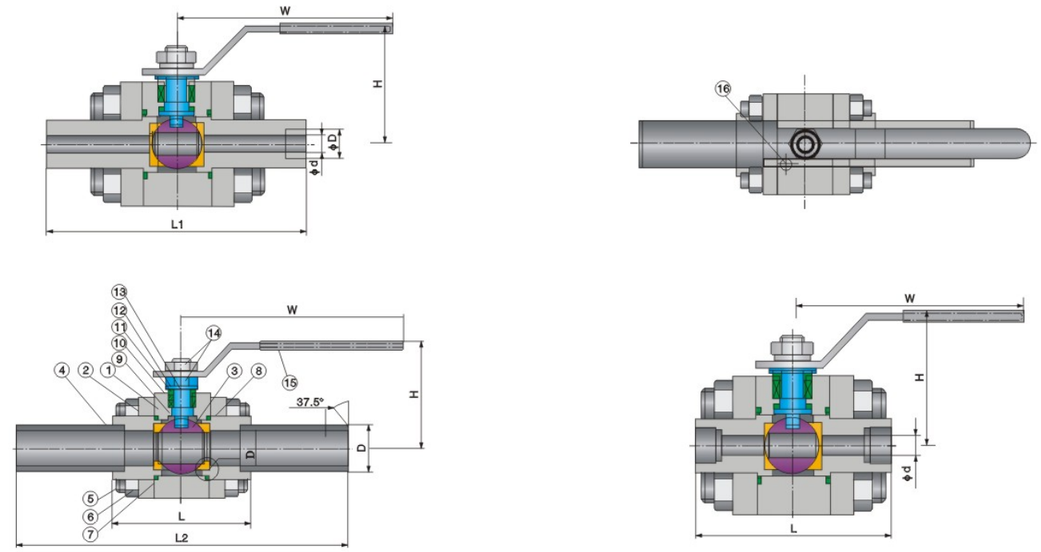

Feature

- 3PC body
- Full bore
- Size 1/2" to 2"800Lb(2000psi)
- Threaded end BSPT, NPT, DIN2999
- Socket welded end ANSI 16.11
- Fire–safely
- Anti–static available

Main External Dimensions

NPS	d	D	L	L1	L2	H	W
1/2	12.7	22	100	130	200	65	150
3/4	17.5	28	120	130	220	72	150
1	22	34	135	130	235	80	170
1 1/4	28.5	43	165	180	265	80	170
1 1/2	38	49	200	210	300	105	240
2	47.5	61	220	250	320	114	240

Main Parts and Materials

No.	Part Name	Material
1	Body	A105 SS316
2	Cap	A105 SS316
3	Ball	SS410 SS316
4	Nipple	A105 SS316
5	Bolt	A193 B7 A193 B8M
6	Nut	A194 2H A194 B8
7	Seal Gasket	RPTFE
8	Seat	RPTFE
9	seal	RPTFE
10	Packing	RPTFE
11	Packing gland	SS304
12	Spring	SS301
13	Stem	A276 410 SS316
14	Nut	A194 2H A194 B8
15	Handle	SS301+PVC
16	Stoper	SS304

Guang Model Flanged Ball Valve

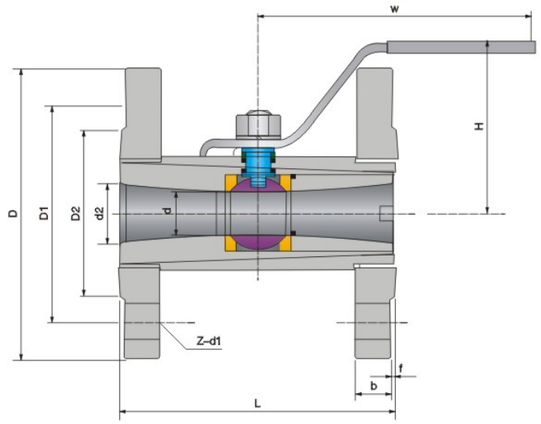

Technical Specification

Working Pressure	1.6–4.0MPa
Temperature Range	–29℃~200℃
Suitable medium	(W.O.G) Water, oil, gas and some Corrosive l iquid

Main Parts and Materials

Suitable Medium	Type	Body	Ball,Stem	Handle	Sealing ring	Gasket,Packing
Water,steam,oil	Q41F–16C、Q41F–25C Q41F–40C	A105、45	1Cr18/1Cr18Ni9Ti	SS304	Polytetrafluoroethylene (PTFE) reinforced polytetra fluoroethylene (VULLUK) PTFE para–polystyrene (PPL)	Polytetrafluoroethylene (PTFE) and polystyrene (PPL)
Nitric Acid	Q41F–16P、Q41F–25P Q41F–40P	SS304/1Cr18Ni9Ti	SS304/1Cr18Ni9Ti			
Acetic Acid	Q41F–16R、Q41F–25R Q41F–40R	SS316/1Cr18Ni12Mo2Ti	SS316/1Cr18Ni12Mo2Ti			

Main External Dimensions

DN		d	d2	L	D	D1	D2	b	f	Z-d1	H	W
mm	in											
15	1/2"	10	15	92	95	65	45	14	2	4–14	60	110
20	3/4"	12.6	20	106	105	75	55	14	2	4–14	65	110
25	1"	17	24	109	115	85	65	16	2	4–14	70	110
32	1 1/4"	22	32	126	135	100	78	16	2	4–18	85	145
40	1 1/2"	25	38	136	145	110	85	16	3	4–18	90	145
50	2"	32	46	154	160	125	100	18	3	4–18	98	177
65	2 1/2"	44	60	170	180	145	120	20	3	8–18	110	190
80	3"	50	72	195	195	160	135	22	3	8–18	130	240
100	4"	65	92	215	215	180	155	22	3	8–18	150	260

Flange standard: JB/T 79
Flange also can be designed and manufactured according to GB/T 9113.

Guang Model Male Threaded Ball Valve & Butt Welded Type

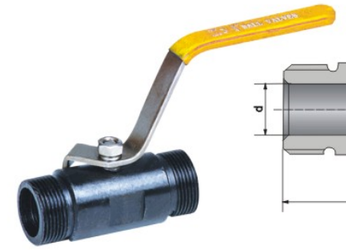

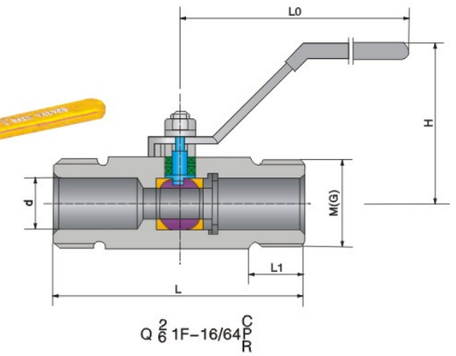

Technical Specification

Working Pressure	1.6–6.4MPa
Service temperture	–29℃~200℃
Service medium	(W.O.G) Water, oil, gas and some Corrosive liquid
Thread type	ZG.G · NPT.BSPT.BSP.DIN259/2999

Main Parts and Materials

Part Name	Body	Ball,Stem	Handle	Sealing ring	Gasket,Packing
Q21F–16C、Q21F–25C、Q21F–40C、Q21F–64C	A105、45	1Cr18/1Cr18Ni9Ti	SS304	Polytetrafluoroethylene (PTFE) and polystyrene (PPL)	Polytetrafluoroethylene (PTFE) and polystyrene (PPL)
Q21F–16P、Q21F–25P、Q21F–40P、Q21F–64P	1Cr18Ni9Ti	SS304/1Cr18Ni9Ti			
Q21F–16R、Q21F–25R、Q21F–40R、Q21F–64R	SS316/1Cr18Ni12Mo2Ti	SS316/1Cr18Ni12Mo2Ti			

Main External Dimensions

Nominal Diameter	Dimensions (mm)					
	d	L	L1	M	Lo	Total length of butt welding joints Q61
6	8	85	15	20×1.5	110	166
10	10	85	16	24×1.5	110	166
15	10	85	18	30×2	110	172
20	13	90	18	36×2	110	187
25	17	100	20	42×2	110	227
32	22	120	20	52×2	150	235
40	25	135	25	60×3	150	255
50	32	140	25	72×3	180	291

Threaded end standard: GB196

Pneumatic Ball Valve

QG · Y1 Pneumatic Ball Valve

QG · Y1 Socket ball valve

Main parts and material and processing propety

Type	Name	Nominal Pressure	Strength Test Pressure	Seal Test Pressure	Parts material					Suitable Temperature
					Body	Seat	Ball	Stem	Packing	
QG · QY1	Air ball valve	1.0 2.5	1.5PN	1.1PN	H62		Acid steel		PTFE	Normal Temperature
QY-1	pneumatic-operated ball valve									
QY-2										
QY-3										
QG · Y1	Ferrule type ball valve	2.5 4.0 6.4			Carbon steel acid steel		Acid steel		PTFE	-20~200
QJH · Y1										
QG · Y1	Pressure-reducing ball valve									
QJH · AY1										
QG · M1	Pressure-gage ball valve									
QJH · M1										
Q11SA	Female screw ball valve								Flexible graphite	-40~150
Q91SA	Reducing ball valve									

Main External Dimensions

Type	Name	Nominal Diameter (mm)	Tubing Diameter (mm)	Face to Face (mm)
QG · QY1	Pneumatic Ball Valve	4、6	6、8	90
QY-1	Pneumatic piping ball valve	--	6、8、10	66、68、80
QY-2	Pneumatic piping ball valve	--	6、8、10	65、66、67
QY-3	Pneumatic piping ball valve	--	6、8、10	65、66、67
QG · Y1	Socket ball valve	10	12、14	130
QJH · Y1	Socket ball valve	10、15	12、14、18	130
QG · AY1	Pressure-reducing ball valve	10	12、14	105
QJH · AY1	Pressure-reducing ball valve	10、15	12、14、18	105
QG · M1	Pressure-gage ball valve	10	--	145
Qg · M1	Pressure-gage ball valve	3	--	145
QIISA	Female threaded ball v	10、15	--	68
Q91SA	Reduced bore ball valve	10	14	100

Ball Valve Flow Coefficient

Ball Valve Flow Coefficient Specification

DN	NPS	PN 16/25	Class 150	PN 40	Class 300	PN 100	Class 600	PN 150	Class 900	PN 250	Class 1500	PN 420	Class 2500
15	1/2	25		25		20		16		16		16	
20	3/4	56		56		40		34		34		32	
25	1	95		95		64		55		55		50	
40	11/2	308		308		308		165		165		160	
50	2	420		420		400		330		330		250	
65	21/2	690		690		610		520		510		320	
80×50	3×2	200		200		200		190		180		200	
80	3	1200		1050		1000		910		820		500	
100×80	4×3	600		600		600		590		550		560	
100	4	2200		2100		1850		1800		1700		1100	
150×100	6×4	800		800		790		790		780		745	
150	6	5150		5100		4600		4380		3800		2500	
200×150	8×6	2150		2150		2150		2150		2150		2150	
200	8	9500		9400		9000		8500		7400		5300	
250×200	10×8	4300		4300		4300		4450		4450		4100	
250	10	15000		15000		14700		14500		11500		8300	
300×250	12×10	7550		7550		7550		8000		9000		7550	
350×250	14×10	6000		6000		6000		6100		6100		–	
300	12	23000		23000		22500		21100		18000		13000	
350×300	14×12	14000		14000		14000		12800		13000		–	
400×300	16×12	9100		9100		9100		8900		8900		–	
350	14	28000		28000		28000		25000		21000		–	
400×350	16×14	15000		15000		15000		14200		14100		–	
400	16	37200		37200		37200		34500		27500		–	
450×400	18×16	21000		21000		21000		19200		19000		–	
500×400	20×16	15300		15300		15300		13800		12000		–	
450	18	49000		49000		49000		45000		37000		–	
500×450	20×18	28400		28400		28400		25000		25000		–	
500	20	59000		59000		59000		55200		47800		–	
600×500	24×20	28200		28200		28000		25100		20600		–	
550	22	68200		68200		68200		62000		54000		–	
600	24	92000		92000		92000		83800		70000		–	
750×600	30×24	36000		36000		36000		32900		–		–	
650	26	110000		110000		110000		98500		–		–	
700	28	121000		121000		121000		113000		–		–	
750	30	145000		144000		144000		130000		–		–	
900×750	36×30	64000		64000		64000		61500		–		–	
800	32	170000		170000		170000		151000		–		–	
900×800	36×32	87000		87000		87000		69500		–		–	
900	36	210000		210000		210000		198200		–		–	
1000	40	267500		267500		267500		–		–		–	
1050×900	42×36	96700		96700		96000		–		–		–	
1050	42	280000		280000		280000		–		–		–	
1200	48	384000		384000		384000		–		–		–	
1400×1050	56×42	89000		89000		89000		–		–		–	
1400	56	521000		521000		521000		–		–		–	

Ball Valve
How To Order

Pruduct model of BAOYI valves is coded according to standard JB/T 308"valves model designation method" and adjusted based on industry practises and product charactersitics. As the product model does not fully present overall characteristics of the products, for special requirements, it is recommended that the user shall supplement it by words

Example

Sample	DN200	Q	3	4	7	F	-	25	P
Code	I	II	III	IV	V	VI		VII	VIII

I	Valve Size	Sample
NPS	Nominal Pipe Size	NPS2, NPS3"
DN	Nominal Size	DN50, DN80

II	Valve Type	
Q	Ball Valve	Normal
BQ		Insulated
DQ		Cryogenic (≤-29℃)
FQ		Fire Durabled
KQ		Resist SSC
PQ		Slag Discharged
EQ		Emergency Shut-off
WQ		Bellows Type
HQ		Full welded

III	Operated
1	N/A for Lever Operated
2	Electro-hydraulic Operated
3	Worm-gear Operated
6	Pneumatic Operated
6s	Pneumatic Operated with Manual
7	Hydraulic Operated
7s	Hydraulic Operated with Manual
8	Pneumatic-Hydraulic Operated
9	General Electro Operated
9B	Explosion-Proof Electro Operated

IV	Type of Connection
1	Female threaded End
2	Male thread End
4	Flange End
6	Welding End
7	Wafer Type
8	Hooped End
9	Compression Joint Type

V	Type of Construction	
1	Floating Ball	Through-way flow path
2		Y-type 3 Way flow path
4		L-type 3 Way flow path
5		T-type 3 Way flow path

V	Type of Construction	
7	Trunnion Ball	Through-way flow path
6		Four-way flow path
8		T-type 3 Way flow path
9		L-type 3 Way flow path
0		Half-ball Through

VI	Material of Sealing Face
F	Fluorocarbon
G	Ceramic
H	Martensitic Stainless Ste el
M	Monel Metal
N	Nylon
PK	PEEK
PL	PPL
T	Copper Alloy
X	Rubber
Y	Stellite Alloy

VII	Pressure Code	Sample
NPS	Class	150Lb, 300Lb,···
DN	Ten times the nominal pressure value =PN*10	16, 25,···

VIII	Material of Shell
C	Carbon Steel(class and up than PN 25 is not marked)
H	Martensitic SS
I	Chrome-Molybdenum steel
P	Chromium-Nickel SS
R	Chromium-Nickel-Molybdenum SS
T	Copper & Copper Alloy
Ti	Titanium & Titanium Alloy
V	Chrome-Molybdenum-Vanadium Steel

MEMO

4x24
Value-Addd Service

24-hour technical support hotline
24-hour consultation satisfaction reply
24-hour professional service
24 months product warranty commitments

Free Product Selection customized technical services
Free product training, installation and maintenance services
Free on-site product service users
Free three-year limited parts available vulnerability

Technology to provide product service life
Risk-free guarantee product quality and liability insurance
24-hour online : +8618018653319