Telecentric lens

Optical Specifications	
Magnification (x)	0.053
Object Field of View (Φmm)	216
Working Distance (mm)	372±5
Max Sensor Size (Φmm)	11.4(2/3")
Best Aperture (F/#)	4.9
Telecentricity typical (max) (deg)	<0.1
Distortion typical (max) (%)	<0.1
MTF30 (lp/mm)	>180
Depth of Field (mm)	±157@F11
Length of I/O (mm)	898±5

Field of View (mm × mm)	
1/1.8" EV76C570 (7.2x5.4)	135.8x101.9
1/1.7" IMX226 (7.5x5.6)	141.5x105.7
2/3" IMX250/264 (8.45x7.1)	159.4x134.0
Mechanical Specifications	
Mount	C
Length (mm)	508.7
Weight (kg)	13.7
Model number	
HF372-0053X23	

Notes:
1. Depth of Field is calculated value, this value could be used for imaging test, but to get sharp image in application, half of calculated value is suggested.
2. Length of I/O = WD + Length + Back Focal Length.
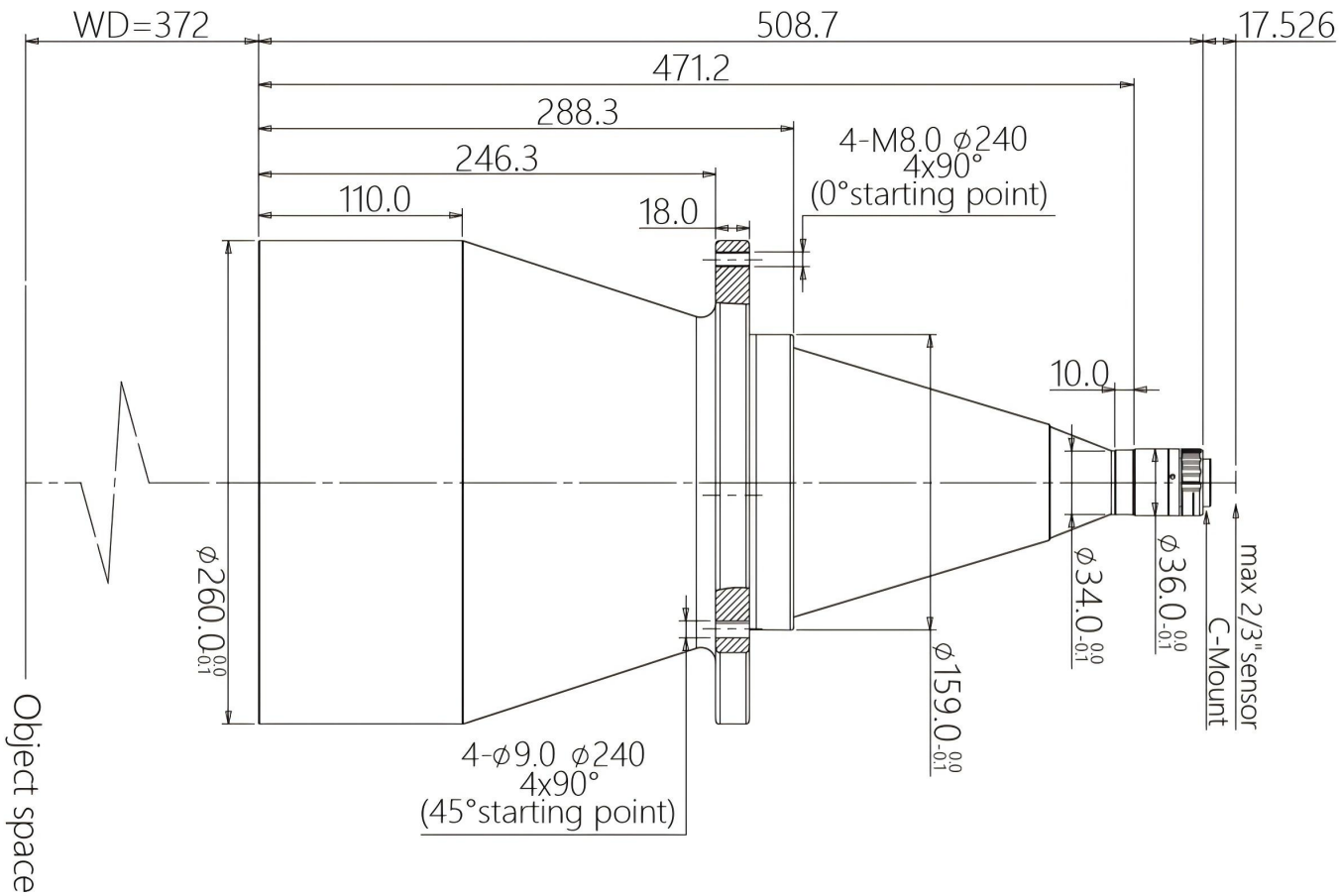
Dimension (Unit: mm)