V-MOUNTS

MOBILE DESK SERIES

VM-FDS106B

Manual Height Adjustment Movable Laptop Desk

Built-in lockable gas spring, freely height adjustment.

Rolling casters, easier for movement and stop.

Simple and neat design, convenient installation, wide range of application.

Table surface splash-proof and easy to scrub.

H shape bese design, provent desk rollover.
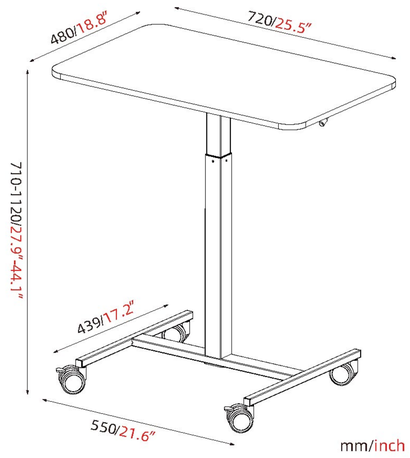
Model No.	VM-FDS106B
Desktop size	720×480mm/25.5×18.8 ”
Height range	710-1120mm/27.9-44.1”
Max load capacity	10kg/22lbs
Base size	439x550mm/17.2×21.6”
Color	Black、White
Material	Steel、Particle Board、Plastic