V-MOUNTS

VM-TC005

Easy To Install&Removable

Height Adjustable Motorized TV Stand

with Multiple Storage Spaces

Height memory mode, can be restored by one button, easy to switch (remote control)

Hanging arm opening design,help the screen convenient installation.

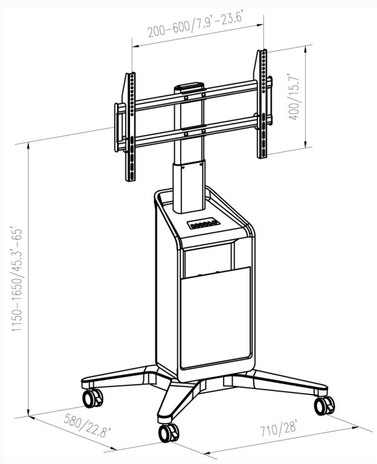

Model No.	VM-TC005
Max. Load Capacity	60KG/132lbs
VESA	MAX 600x400
Height Range	1150-1650mm/45.3-65in
Base Size	710x580mm/28×22.8in
TV Size	37-86 in
Material	Steel, Plastic,Stalinite