V-MOUNTS

JSD5-01-L1

Electric Height Adjustable Desks with L-shaped Desktop

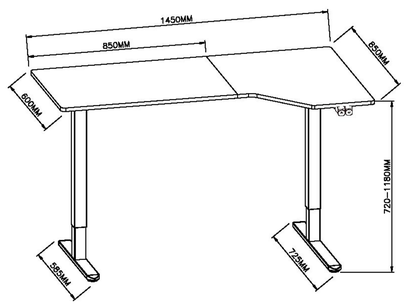

Model No.	JSD5-01-L1
Max. Load Capacity	70KG/154Lbs
Height Range	720-1180mm/28.3-46.5 in
Color	White/Black/Gray
Material	Steel,Particle Board,Plastic