V-MOUNTS

Anti-slip Design

Height Adjustable Mobile Desk

VM-FDM102

Rounded corners design, enhance the comfort experience.

Increase tabletop stopper, anti-slip design.

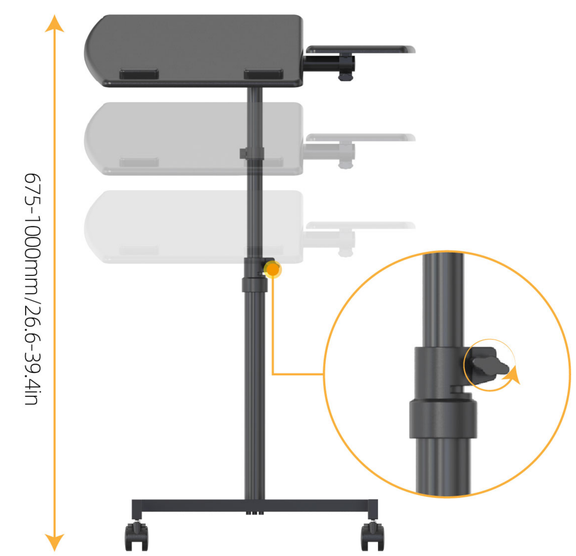

Knob lock, adjustable height of column.

Universal wheel design, can move or stop at will.

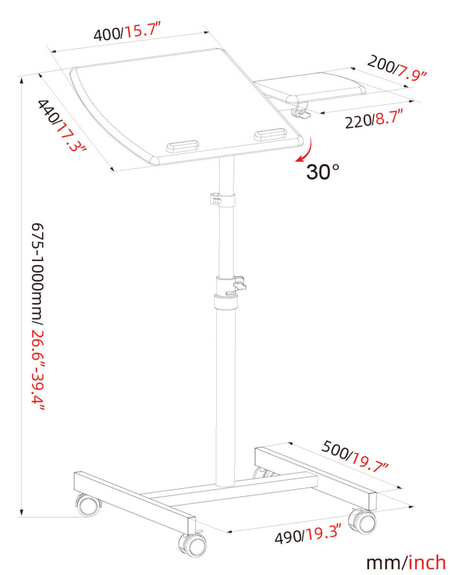

Model No.	VM-FDM102
Max. Load Capacity	10KG/22lbs
Desktop Size	440x400mm/17.3x15.7in
Height Range	675-1000mm/26.6-39.4in
Base Size	490x500mm/19.3x19.7in
Frame Color	White/Black/Gray
Material	Steel,MDF,Plastic