V-MOUNTS

Dual-layer Platform

Electric Height Adjustable Desk

JSD5-01-2P-PF

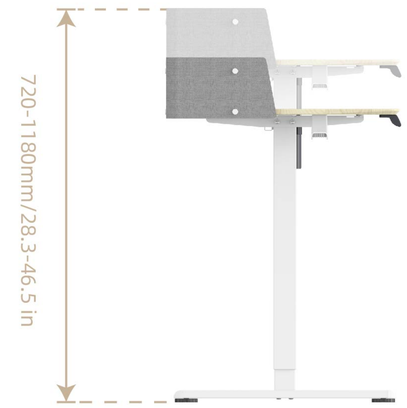

Effortlessly switch between sitting and standing positions.

Convenient storage solution with double fabric drawers.

Headphone hook for a clutter-free workspace.

Both feet height can be fine-tuned.

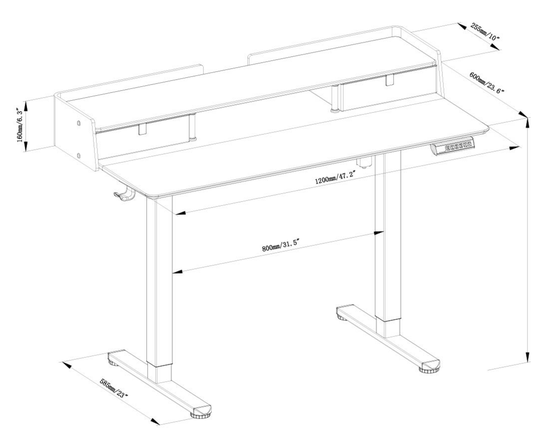

Model No.	JSD5-01-2P-PF
Max. Load Capacity	70KG/154Lbs
Height Range	720-1180mm/28.3-46.5 in
Power input	110V-240V
Color	White/Black/Gray
Material	Steel, Plastic,Finger-jointed Wood,Cloth