V-MOUNTS

Mobile Sofa/Bed-side Height Adjustable Laptop Desk

VM-FDS111C

Portable mobile desk,meeting different needs of usage scenarios.

Spacious desktop,
enough to place your laptop or books.

Conveniently pushed under the sofa
or bed via lower base and hidden caster.

Switch between sitting and standing position,
making your working statement more comfortable.

Pinch the flat handle switch by one hand,
conveniently adjust the height.
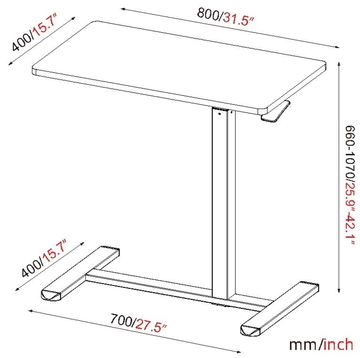
Model No.	VM-FDS111C
Max. Load Capacity	8 kgs/ 17.6 lbs
Desktop Size	800x400 mm/31.5x15.7 in
Height Range	660-1070 mm/25.9-42.1 in
Base Size	700x400 mm/27.5x15.7 in
Color	White/Black
Material	Steel、Particle Board、Plastic