V-MOUNTS

V-mounts
Height Adjustable TV Mount

Motorized TV lift is compatible with TVs up to 86 inches.

Smart hand controller with 2 level height memory mode.

Built-in 2 trays for placement of items.

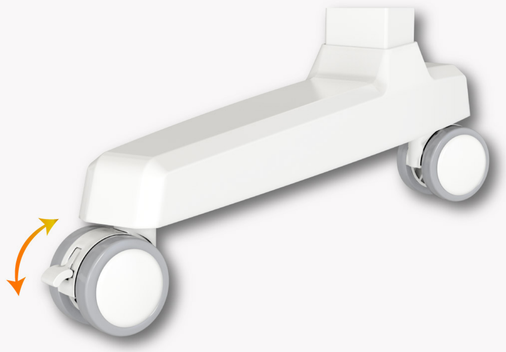

Pulley design for better move.

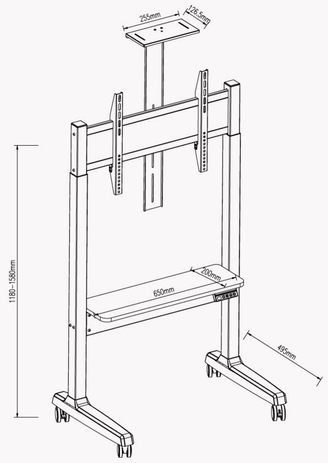

Model No.	VM-TC008
Max. Load Capacity	70KG/154Lbs
TV Size	37-86 in
VESA	Max 600X400
Height Range	1180-1580mm/46.5-62.2 in
Product Color	Black,walnut/White,light wooden grain
Material	Steel,Particle Board,Plastic

VM-TC008