V-MOUNTS

Mobile Laptop Desk with Flippable Desktop

VM-FDS107F

Lockable universal wheels for easy movement and stoppage.

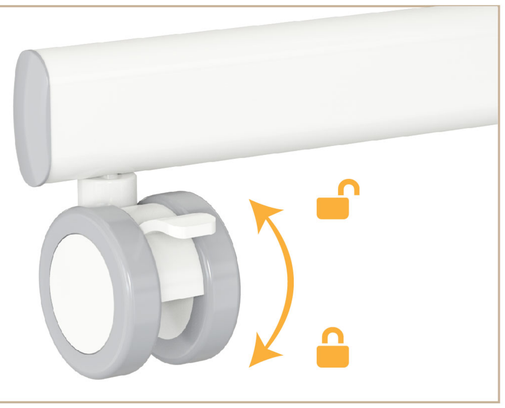

Slot and cup holder design for additional storage space.

Lockable gas spring for smooth stepless height adjustment.

Flippable desktop to meet the needs of various office angles.

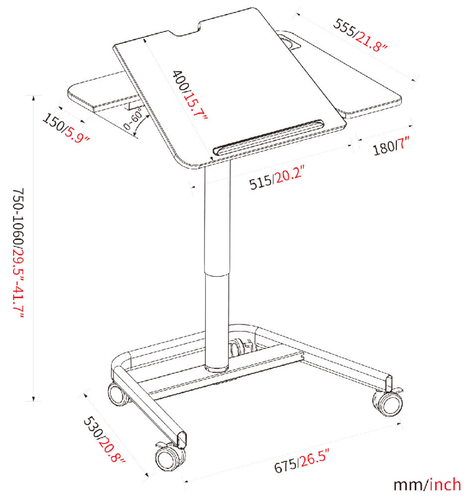

Model No.	VM-FDS107F
Max. Load Capacity	10KG/22lbs
Desktop Size	700x550mm/27.6x21.7in
Height Range	750-1060mm/29.5-41.7in
Base Size	675x530mm/26.6x20.9in
Product Color	White/Black
Material	Steel,MDF,Plastic