V-MOUNTS

Sofa/Bed Side Height Adjustable Mobile Desks

VM-FDS111A

Desktop arc angle design,
comfortable and ergonomic.

Gas spring mechanism ,
making the liftng process smooth.

Single handle
switch height adjustment,
better your work efficiency.

The splash-proof desktop
is easy to scrub.

With hidden casters and lower base,easily push it under the sofa or bed.
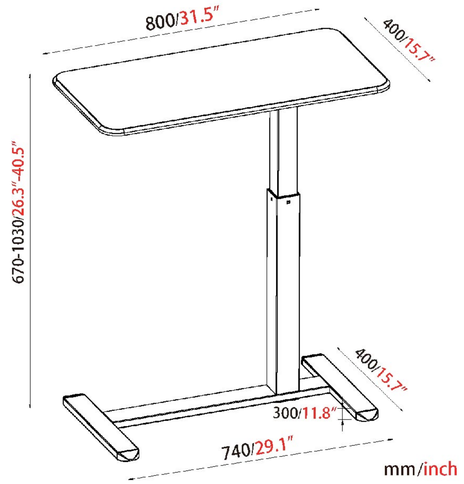
Model No.	VM-FDS111A
Max. Load Capacity	8KG/17.6Lbs
Height Range	670-1030mm/26.3-40.5 in
Desktop size	800x400 mm/31.5x15.7 in
Base size	740x400 mm/29.1x15.7 in
Color	White/Black
Material	Steel, Plastic,MDF & PVC