V-MOUNTS

Gas Spring Manual Adjustable Laptop Desk with Flipped Board

VM-FDS111B

Add the edge stopper for worry-free reading and writing

Squeeze the lever,smoothly lifting up and down

Easily stopped at any height via gas spring lockable function

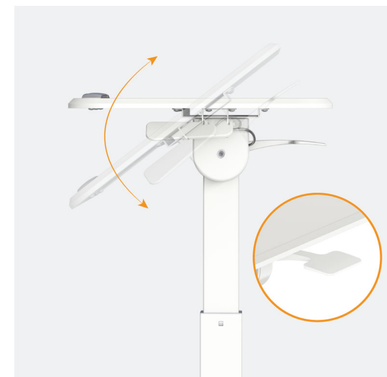

90° flipped desktop designed to optimize the working perspective.

Hidden casters lower the desk base, handily put it aside the bed or sofa.

Easy to clean waterproof and scratch-resistant surface

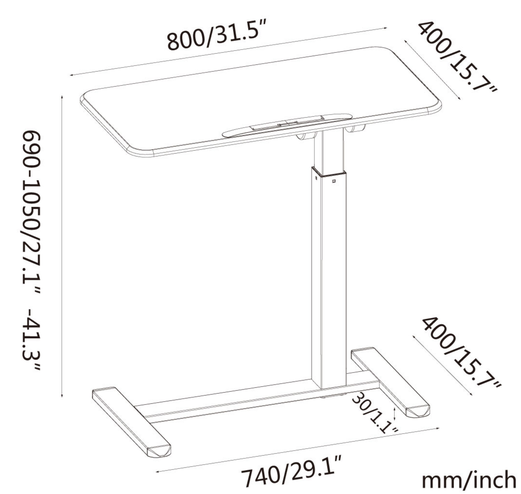

Model No.	VM-FDS111B
Color	Black / White
Drive mode	Gas Spring
Main material	Steel+Plastic
Max.Load capability	8kgs/17.6lbs
Desktop size	800x400mm/31.5x15.7"
Height range	690-1050mm/27.1~41.3"
Base Size	740x400mm/29.1x15.7"