V-MOUNTS

L-shaped Desktop Electric Adjustable Office Desk

JSD5-01-L

Spacious L-shaped right-angle desktop design.

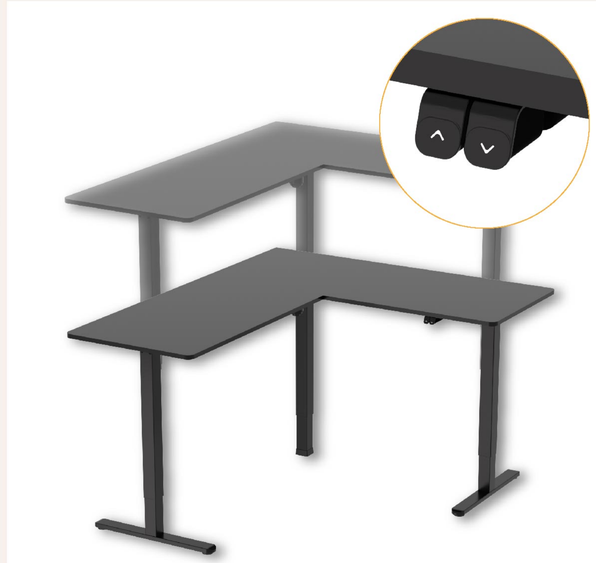

One-touch height adjustment with smart hand controller.

Outstanding load-bearing capacity.

Micro-adjustable non-slip foot pad design
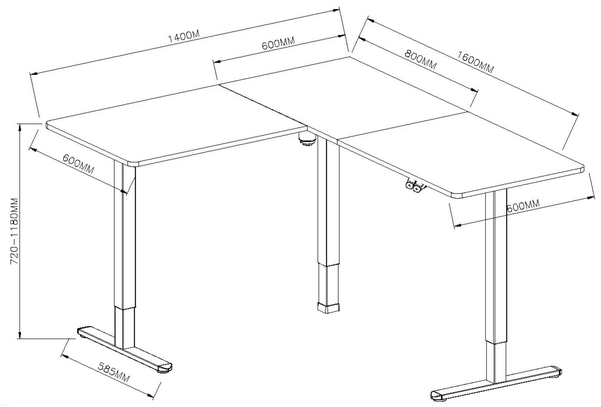
Model No.	JSD5-01-L
Max. Load Capacity	80KG/176Lbs
Height Range	720-1180mm/28.3-46.5 in
Color	White/Black/Gray
Material	Steel, Particle Board,Plastic