V-MOUNTS

Modern Design
Electric Height Adjustable Desk
with Single Column Tempered Glass Desktop

JSD1-01-G6-D

Single column & wooden base design, minimal design with advanced texture.

Tempered glass desktop surface is water-proof and easy to scrub.

USB & Type-C interface, convenient for power supply.

The collision detection function ensures safety of use.

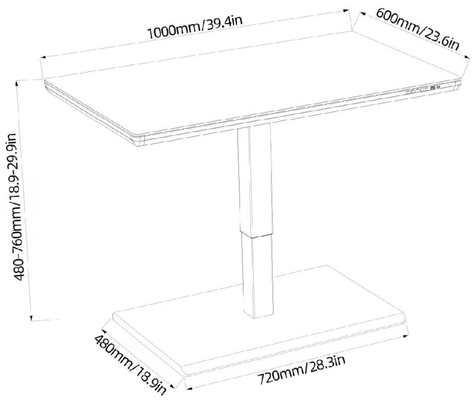

Model No.	JSD1-01-G6-D
Max. Load Capacity	50KG/110lbs
Desktop Size	1200×600mm/39.4×23.6in
Height Range	480-760mm/18.9-29.9 in
Color	Black/Wood grain
Material	Steel, Plastic,PB,Stalinite