V-MOUNTS

Double-platform Design Electric Height Adjustable Desk *with Integrated Cabinet*

JSD5-02-2P-SD

Freely adjust the height and easily preset 3 positions.

Collision detection system for safe height adjustment.

Micro-adjustable foot pads for balanced use

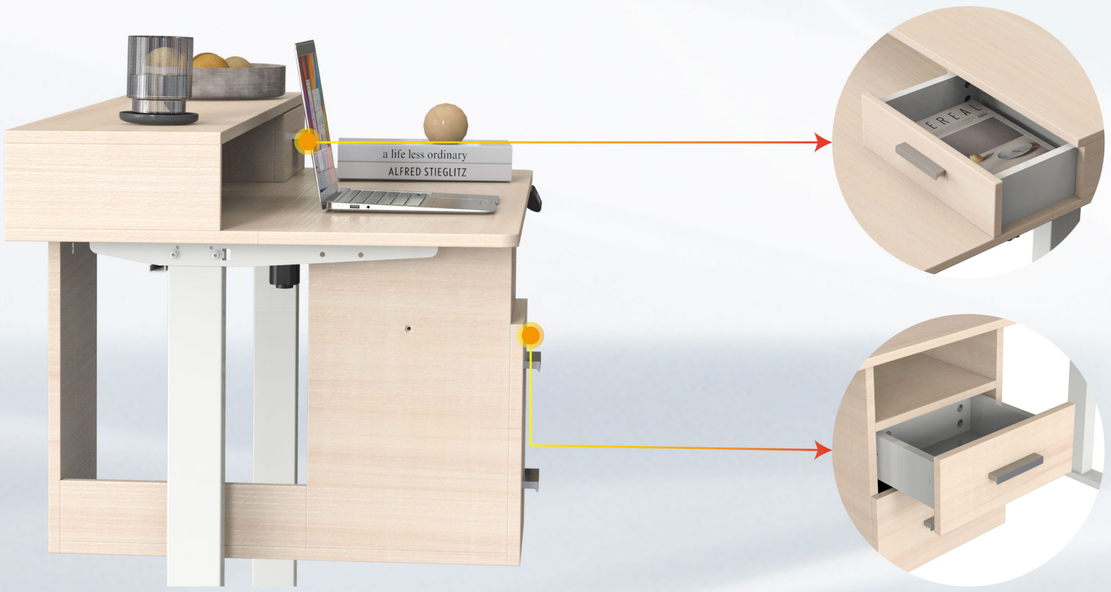

Double-layer platform design and integrated Cabinet expands desktop space.

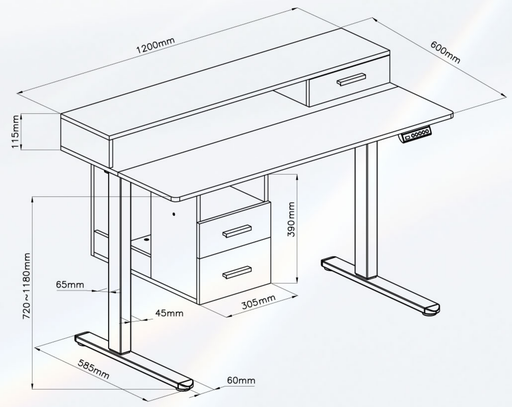

Model No.	JSD5-02-2P-SD
Max. Load Capacity	70KG/154Lbs
Height Range	720-1180mm/28.3-46.5 in
Color	
Material	Steel,Particle Board,Plastic