V-MOUNTS

Wooden Furniture Adjustable Desktop Converter

Lockable gas spring for freely adjustable height.

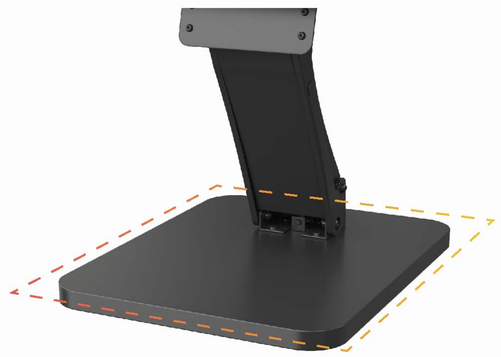

Stable square construction base design.

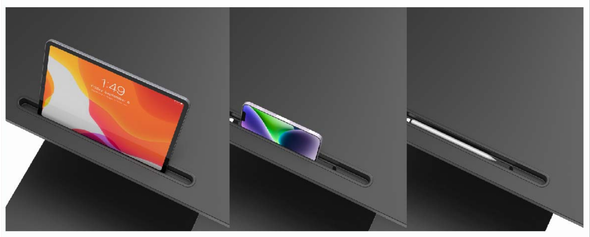

Convenient storage slot design (for tablets, mobile phones, pens).

Desktop arrangement for direct use.
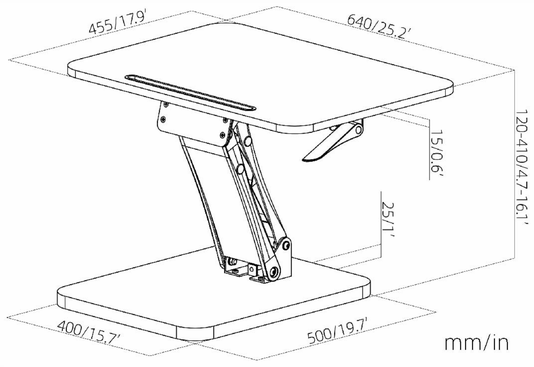
Model No.	VM-GSD78
Max. Load Capacity	10KG/22 Lbs
Height Range	120-410mm/4.7-16.1 in
Desktop size	640×455mm/25.2×17.9in
Base size	500×400mm/19.7×15.7in
Color	Black
Material	Steel,Aluminum,PB, Plastic