V-MOUNTS

Ergonomic Furniture Height Adjustable Desktop Converter

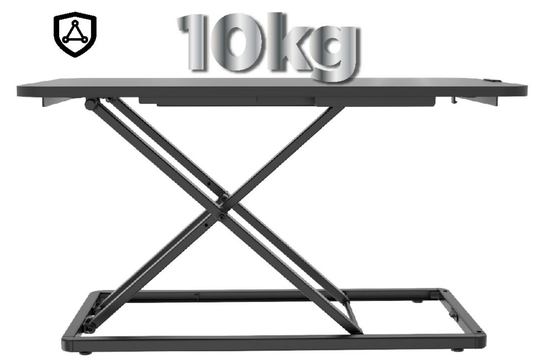

Sturdy and durable construction for long-lasting use.

Efficiently organizes and maximizes desk space.

Minimalist design adds aesthetic appeal to any workspace.

Easy setup and installation without the need for tools.

Easily switch between sitting and standing work conditions.

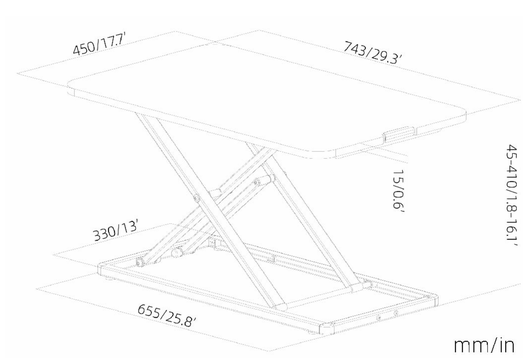

Model No.	VM-SD04-PB
Max. Load Capacity	10KG/22 Lbs
Height Range	45-410mm/1.8-16.1 in
Desktop size	743×450mm/29.3×17.7 in
Color	Black
Material	Steel, Particle Board,Plastic