Gas Spring Anti-slip Design Height Adjustable Desk with Portable Drawer

VM-FA102

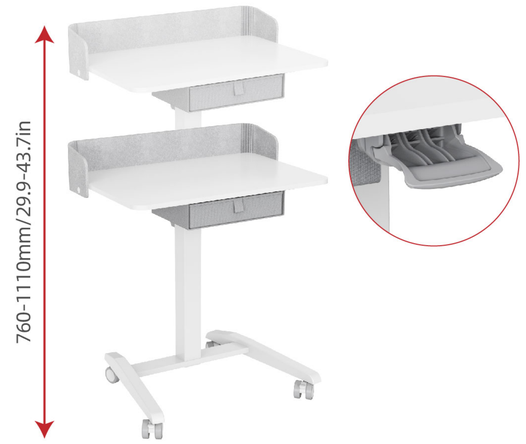

Built-in gas spring, free to adjust the height of the lift (handle adjustment).

Splash-proof and easy to clean table surface.

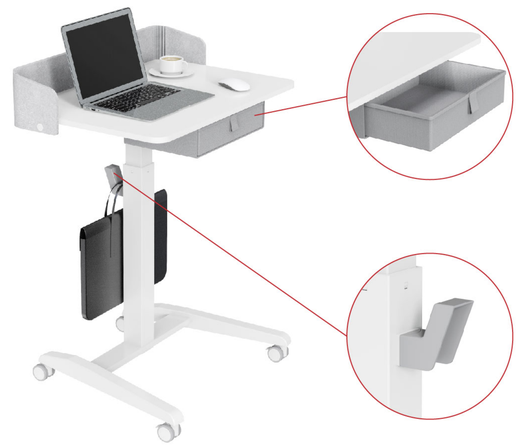

Hook and drawer design allows for flexible storage and hanging, easily achieving a tidy and efficient workspace.

Add a desktop edge guard with a non-slip design.

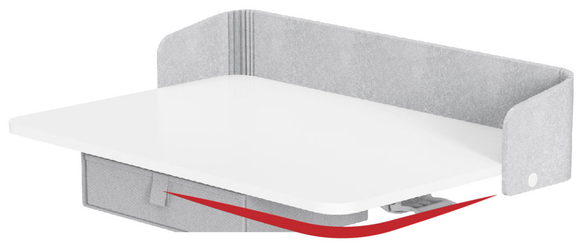

Rounded corners to enhance the comfort experience.

Universal wheel design, can be moved or parked at will.

- Built-in gas spring, free to adjust the height of the lift (handle adjustment)
- Convenient storage (drawer, hook)
- Splash-proof and easy to clean table surface
- Add a desktop edge guard with a non-slip design.
- Rounded corners to enhance the comfort experience
- Universal wheel design, can be moved or parked at will

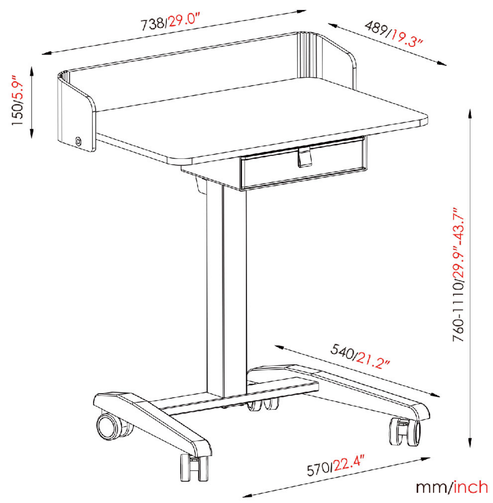

Model No.	VM-FA102
Max. Load Capacity	8kg/17.6lbs
Desktop Size	720x480mm/28.3x18.9in
Height Range	760-1110mm/29.9-43.7in
Base Size	570x540mm/22.4x21.2in
Frame Color	White/Gray
Material	Steel,PB,Polyester fiber,Plastic