V-MOUNTS

# Dual Motor Electric Office Adjustable Desk

JSD2-02-D-1P

**100 kg/ 220 lbs**

★ Outstanding load-bearing capacity.

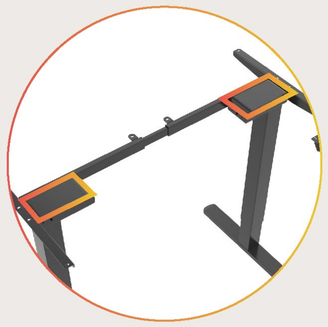

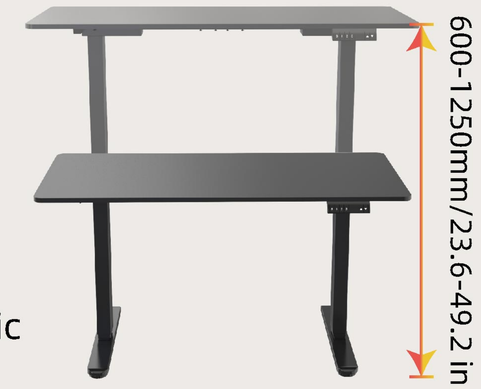


★ Smooth drive with dual motor electric adjustment.

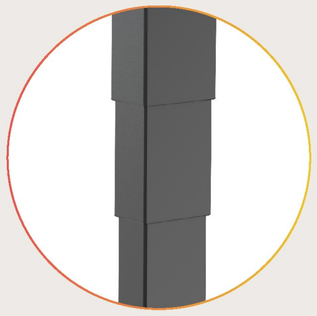

★ Stable table leg structure with three reversed segments.

★ Multiple colours available for customization.

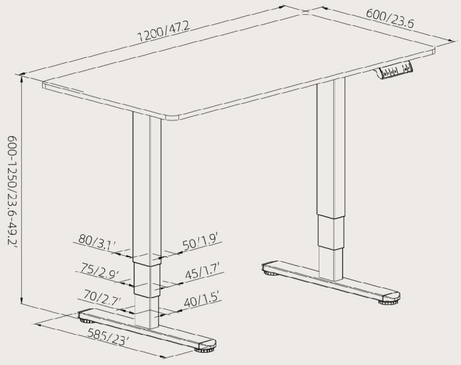


| | |
|---|---|
| Model No. | JSD2-02-D-1P |
| Max. Load Capacity | 100KG/220Lbs |
| Height Range | 600-1250mm/23.6-49.2 in |
| Color | White/Black/Gray |
| Material | Steel, Plastic,Particle Board |