V-MOUNTS

Unique Electric Height Adjustable Desk with Y Base

JSD5-01-1P2-Z

Splash-proof and easy-to-scrub desktop surface.

The collision detection function ensures safety of use.

3 memorable height preset, convenient height adjustment.

The Y-shape provides a stable and modern look.

Foot pads height fine adjustment.

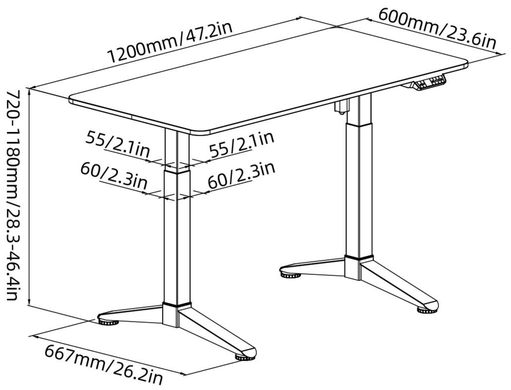

Model No.	JSD5-01-1P2-Z
Max. Load Capacity	70KG/154lbs
Desktop Size	1200×600mm/47.2*23.6
Height Range	720-1180mm/28.3-46.5 in
Color	Black/Antique wood
Material	Steel,PB,Plastic