V-MOUNTS

Economic Single Motor Electric Height Adjustable Desk with 2 Hooks

JSD5-02-2P(NO.5)

Max load **50KG**, fully meet the requirements of daily use.

Single motor frame, suitable for daily office using.

Desktop surface is splash-proof and easy to scrub.

Height memory mode, one-click restore, easy switching.

2 split desktop, smaller package, easier for transportation.

With **two** hooks, easy to organize.

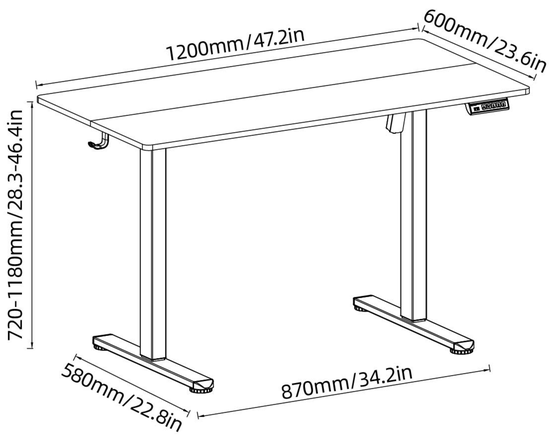

Model No.	JSD5-02-2P(NO.5)
Max. Load Capacity	50KG/110lbs
Desktop Size	1200x600mm/47.2x23.6
Height Range	720-1180mm/28.3-46.4 in
Color	White/Black/Gray
Material	Steel,Plastic,Particle Board