V-MOUNTS

Electric Movement Laptop Desk
with Lithium Battery

*Lithium battery configuration is optional.

VM-FB104

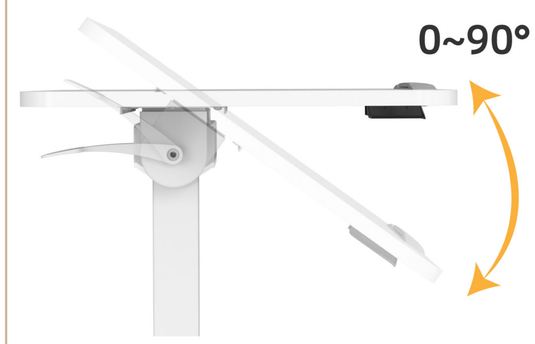

Versatile reversible desktop ideal for various settings.

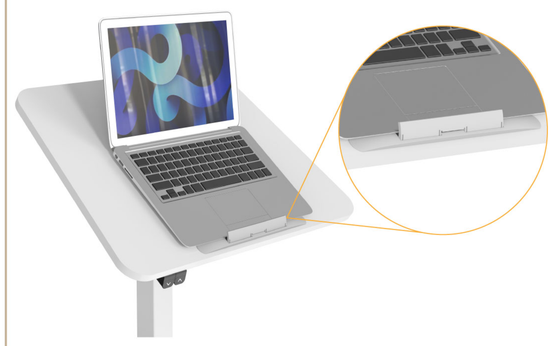

Anti-slip feature ensures devices stay securely in place.

Rounded desk corner design for enhanced comfort.

Splash-proof surface for quick and easy cleaning.

Automatically senses obstacles to ensure safety.

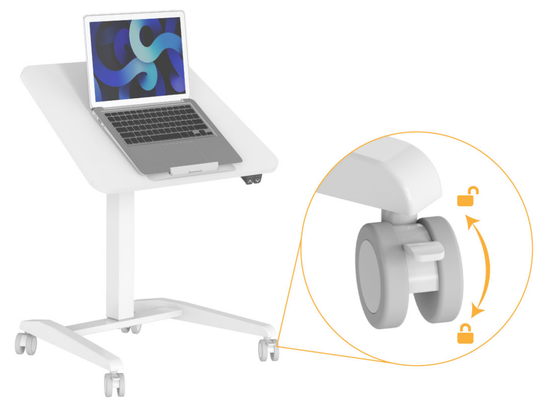

Lockable universal wheels for easy movement and stoppage.

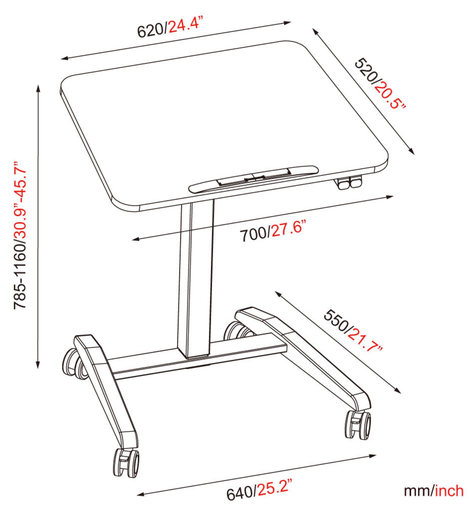

Model No.	VM-FB104
Max. Load Capacity	30kg/66lbs
Desktop Size	700x520mm/27.6x20.5in
Height Range	785-1160mm/30.9-45.7in
Base Size	640x550mm/25.2x21.7in
Product Color	White/Black
Material	Steel,Particle Board,Plastic