V-MOUNTS

Dual Motor Electric Height Adjustable Office Desk

Dual motor frame, suitable for daily office and study use.

Memory function controller, allowing for quick and convenient height adjustments.

Max load 80KG, fully meet the requirements of daily use.

Collision detection function for safety assurance.

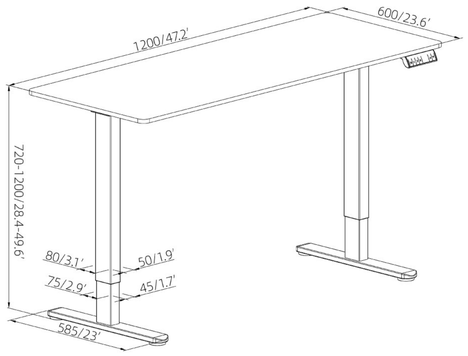

Model No.	JSD2-02-1P
Max. Load Capacity	80KG/176Lbs
Height Range	720-1200mm/28.3-47.2 in
Color	White/Black/Gray
Material	Steel, Plastic,Particle Board