V-MOUNTS

Dual Platform Design Electric Office Desk with Drawers

JSD5-02-2X-ZW

Double-deck desktop design to enlarge the usage space.

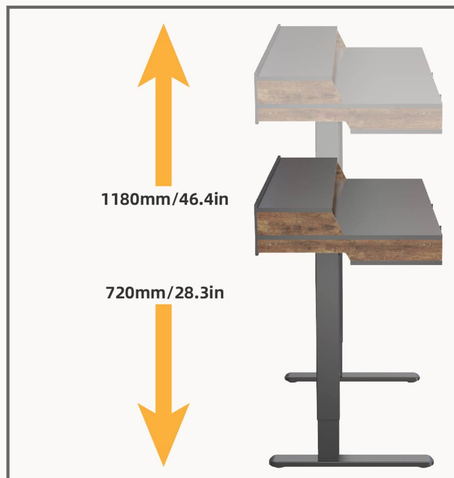

Freely adjust the height and easily preset 3 positions

Two wooden drawers with large storage.

Three holes on the upper layer for simple cable management.

Two available colours to choose from.

Heavy load capacity to meet daily office
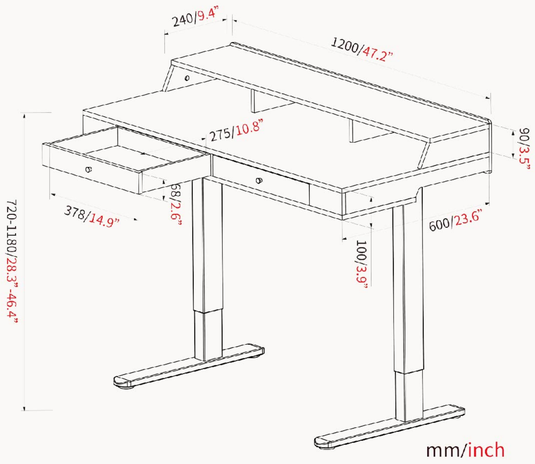
Model No.	JSD5-02-2X-ZW
Max. Load Capacity	70KG/154lbs
Desktop size	1200×600mm/47.2×23.6in
Height Range	720-1180mm/28.3-46.4 in
Leg	2 stage, reversed, rectangular
Frame Color	White/Black/Gray