V-MOUNTS

Sit to Stand Desk Converter for Computer

VM-LD03-PB

Compact size for easy movement to various occasions.

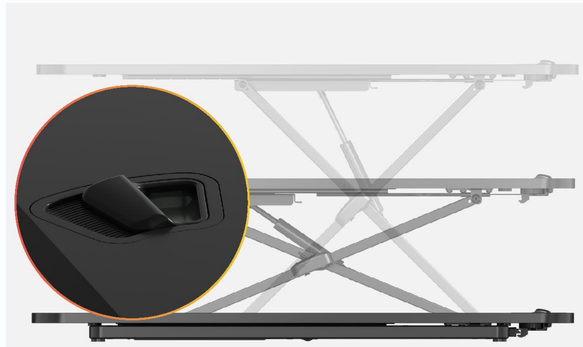

Desktop toggle for easy height adjustment.

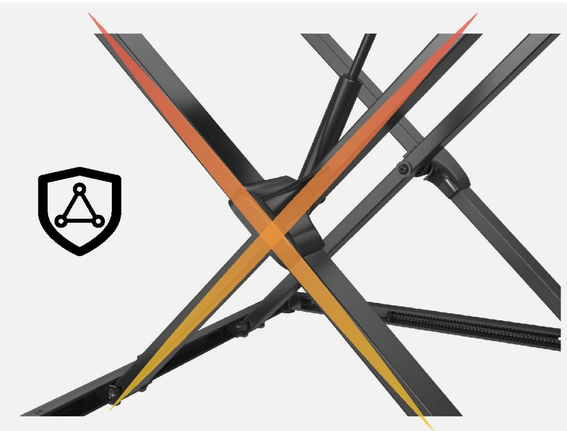

X-shaped stabilized base structure.

Rounded edges to avoid accidental bumps.

Simple and convenient installation-free design.
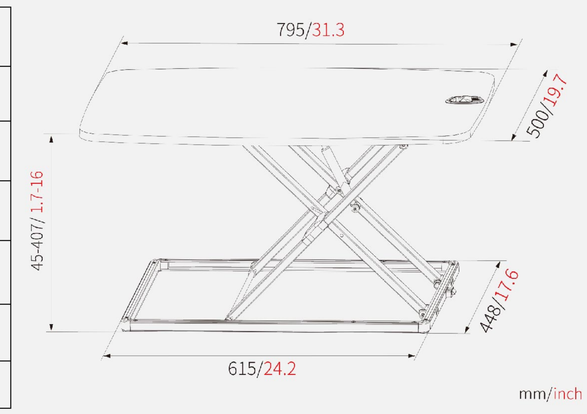
Model No.	VM-LD03-PB
Max. Load Capacity	10KG/22 Lbs
Base size	615×448mm/24.2×17.6 in
Desktop size	795×500mm/31.3×19.7 in
Height Range	720-1200mm/28.3-47.2 in
Color	Black
Material	Aluminum,PB,Steel, Plastic