V-MOUNTS

Ergonomic Desk with Memory Height Settings for Optimal Comfort

JSD-02-2P

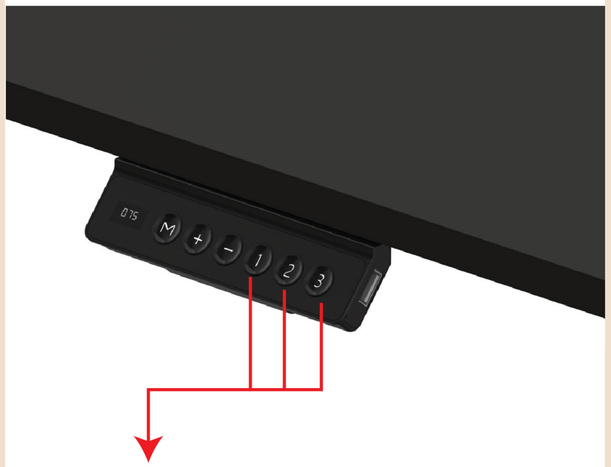

Memory Function:
Save multiple height settings for quick and easy access.

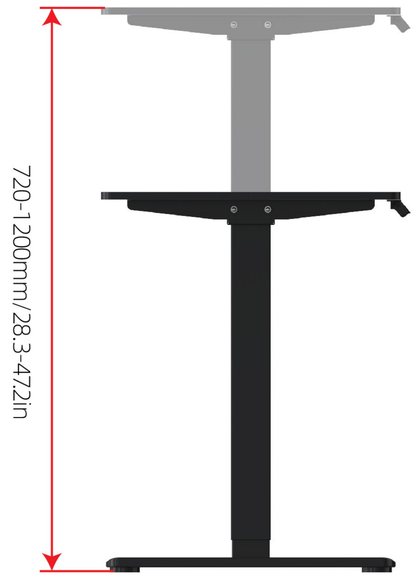

Height Adjustment:
Easily switch between standing and sitting, improving posture.

Versatile Use:
Suitable for office, study, gaming, and various other settings.

Split-board

Easy to Transport:
The split-board design makes the desk easy to disassemble and move.

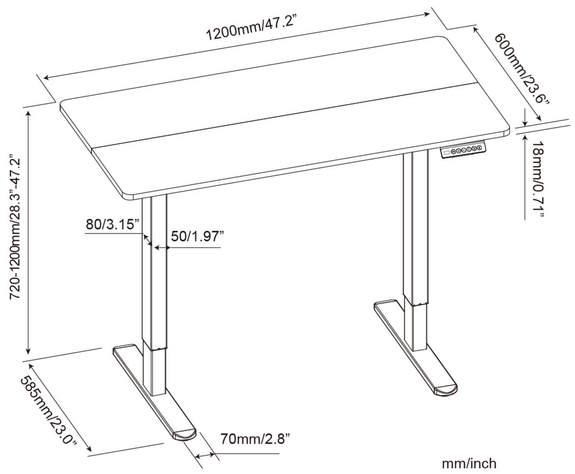

Model No.	JSD2-02-2P
Max. Load Capacity	80KG/176lbs
Desktop Size	1200x600mm/47.2x23.6in
Height Range	720-1200mm/28.3-47.2in
Table Leg	2 segments,reversed installed
Frame Color	White/Black/Gray
Material	Steel,Particle Board,Plastic

Height Adjustment

Durable Materials

Easy Assembly

Easy to Transport