V-MOUNTS

Electric Height Adjustable Desk With Double Platform Design

Double platform design increases the usable space.

The collision detection function ensures safety of use.

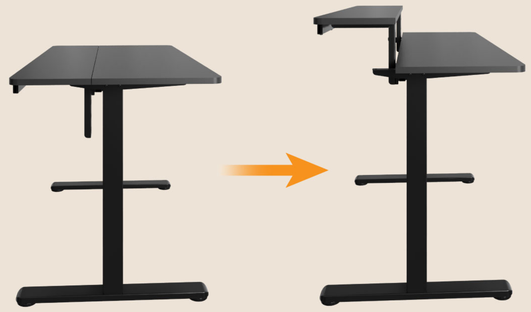

Manual height adjustable second tray height for use.

Electric lift adjustment to set height with one button.

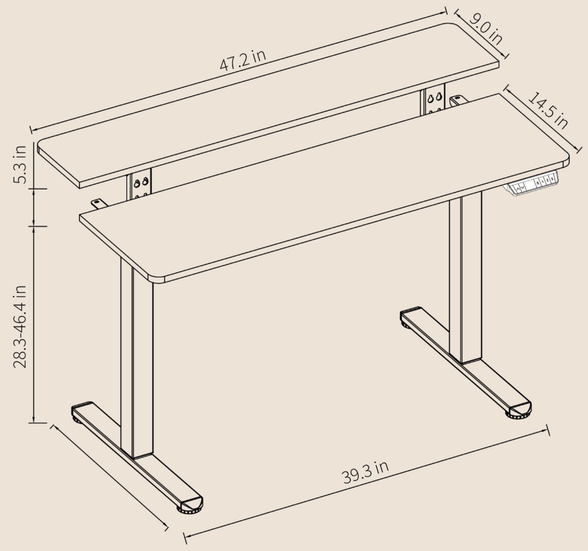

Model No.	JSD5-01-DS
Max. Load Capacity	50KG/110Lbs
Height Range	720-1180mm/28.3-46.4 in
Desktop Size	1200×370mm/47.2×14.5 in
Color	White/Black/Gray
Material	Steel、Particle Board、Plastic
RoHS	