V-MOUNTS

Multi-Sennarional Mobile Laptop Desks

with Reversible Desktop

VM-FA301

Multi-scenario use considerations, the desktop can be flipped 0~90°.

Splash-proof and easy to clean table surface.

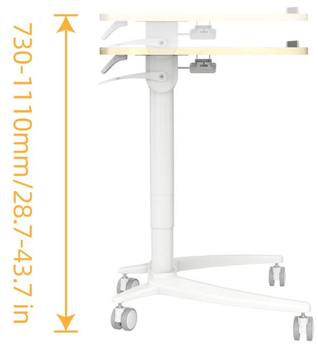

Built-in gas spring, free to adjust the height of the lift.

Universal lockable wheel design, can move or stop at will.
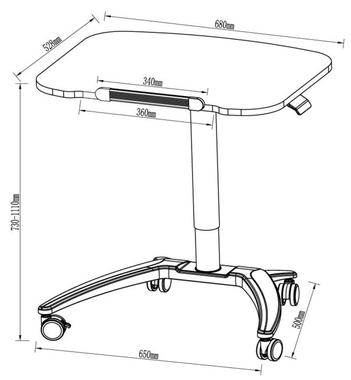
Model No.	VM-FA301
Max. Load Capacity	8kg/17.6lbs
Height Range	730-1110mm/28.7-43.7 in
Desktop Size	680x528x18mm/26.8x20.8x0.7in
Desktop flip angle	0~90°
Color	White/Black
Material	Steel,PB, Plastic,Aluminum