V-MOUNTS

Electric Adjustment Face To Face Workstation Desk For 2 Person

JSD4-02-Z

Dual motors on each side
for lifting without disturbing each other .

Middle shelf to add privacy to your personal office.

Design for cable storage to keep your office tidy .

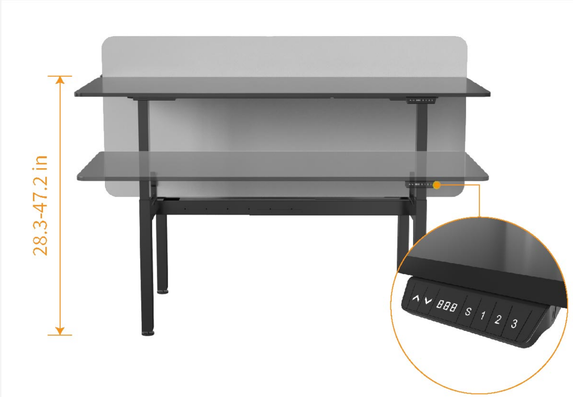

Smart hand controller reaches the setting height
with one button.

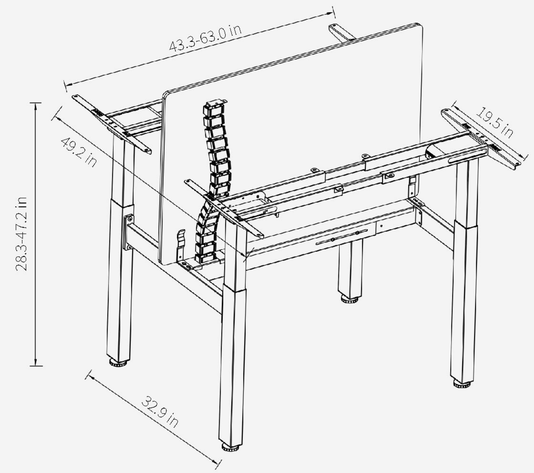

Model No.	JSD4-02-Z
Max. Load Capacity	80KG/176Lbs
Height Range	720-1200mm/28.3-47.2 in
Table Foot Size	75×45×3mm/3.0×1.8×0.1 in
Optional Desktop Size Recommended	47.2-70.9in×23.6-27.6in
Color	White/Black/Gray
Material	Steel、Plastic、Polyester Fiber