V-MOUNTS

Tempered Glass Desktop Electric Height Adjustable Desk with wireless Charging

JSD5-01-G2

Tempered glass desktop ,white or black for choice.

Hidden drawer with large space keeps your desk tidy.

Touch screen with UP/DOWN buttons,4 memory modes to store suitable height.

Wireless charging function,USB and Type-C ports for handy daily work.

Collision detection function is available.

4 foot pads hide under the desk legs,fine-tuned for height adjustment.

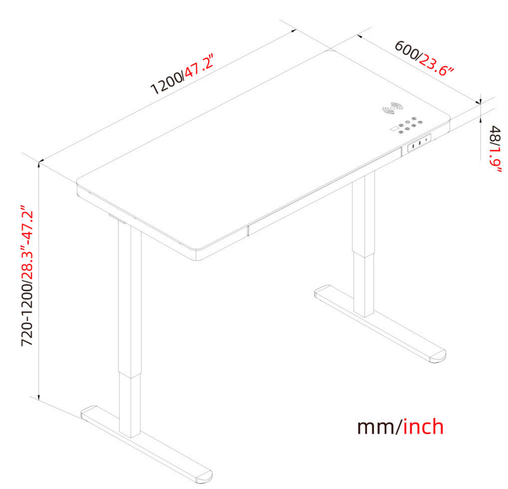

Model No.	JSD5-01-G2
Max. Load Capacity	110 lbs
Height Range	28.3-47.2 in
Table Foot Size	23.6×2.8×0.8 in
Color	White/Black
Material	Steel,Stalinite,Plastic