V-MOUNTS

Wide Desktop Design
Mobile Laptop Desk

VM-FC101

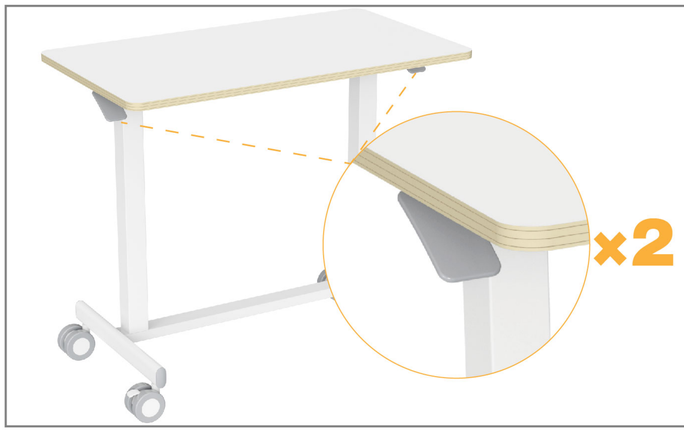

Adjust the height by pressing the handle.

880*500mm extra-wide desktop, providing a more spacious work area compared to standard mobile desks.

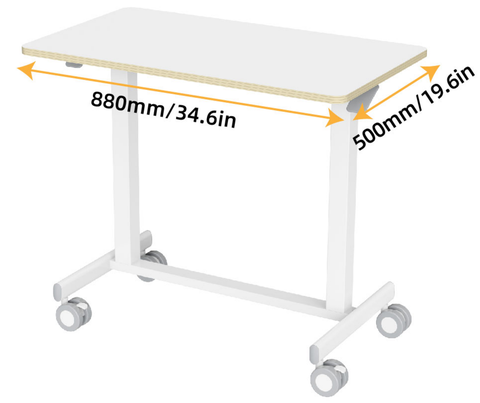

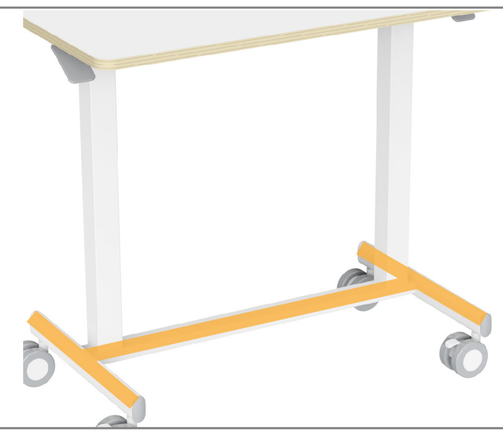

I-beam base stabilizes against roll-over.

Easy mobility with lockable omnidirec-tional wheels.

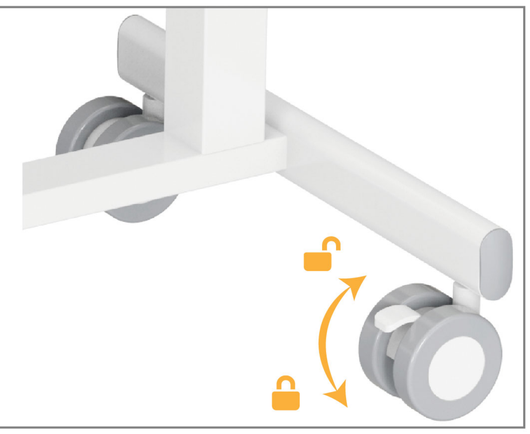

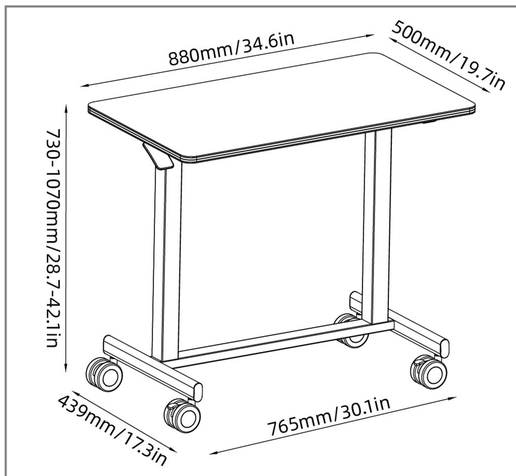

Model No.	VM-FC101
Max. Load Capacity	12kg/26.4lbs
Desktop Size	880x500mm/34.6x19.6in
Height Range	730-1070mm/28.7-42.1in
Base Size	765x439mm/30.1x17.3in
Frame Color	White/Black/Gray
Material	Steel,Particle Board,Plastic