V-MOUNTS

Slim Base Design Foldable Height Adjustable Mobile Desk

VM-FA107

Tiltable table plate and foldable base to save storage space.

I-beam base design prevents tipping over.

Rounded corners design, enhance the comfort experience.

Hidden casters design, suitable for bed and sofa side use.

Splash-proof and easy to scrub the table surface.
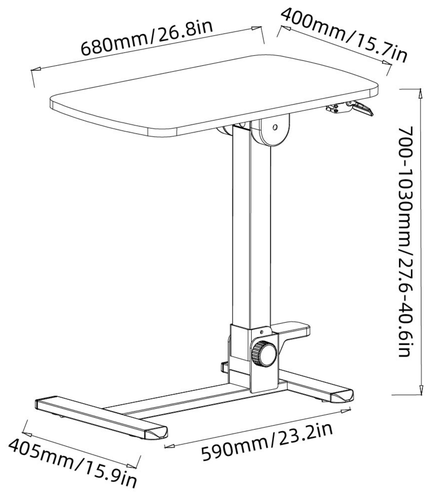
Model No.	VM-FA107
Max. Load Capacity	8KG/17.6lbs
Desktop Size	680×400mm/26.8×15.7in
Height Range	700-1030mm/27.6-40.6in
Base Size	590×405mm/23.2×15.9in
Product Color	White/Black
Flip angle adjustment	0~90°