V-MOUNTS

Ergonomic Office Adjustable Desk

JSD2-01-Z

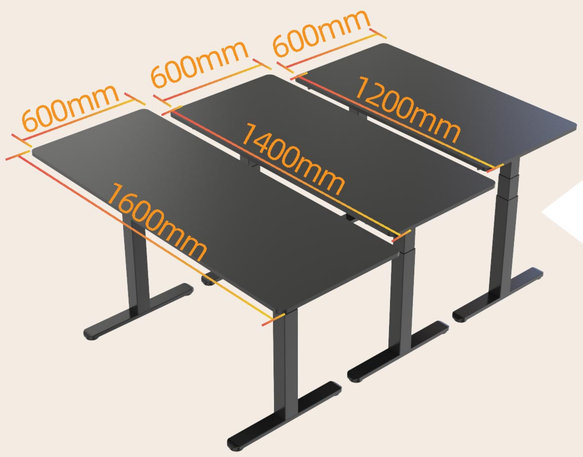

Compatible with various desktop sizes.

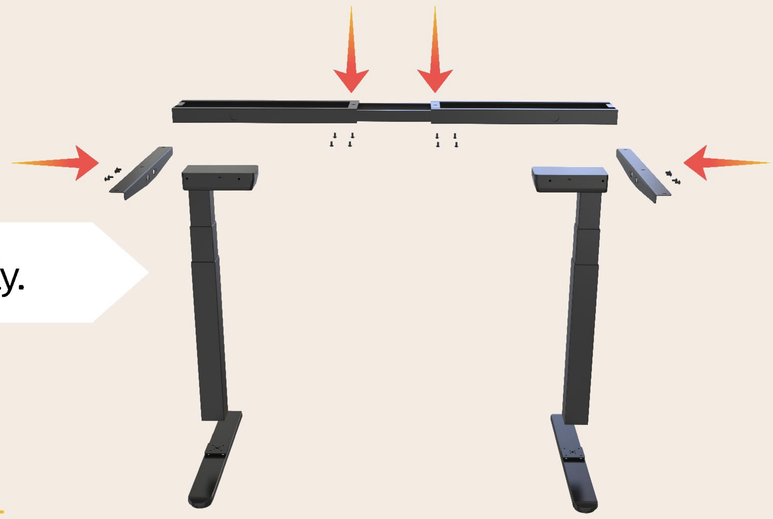

Quick and easy assembly.

Effortless height adjustment.

Durable and stable construction

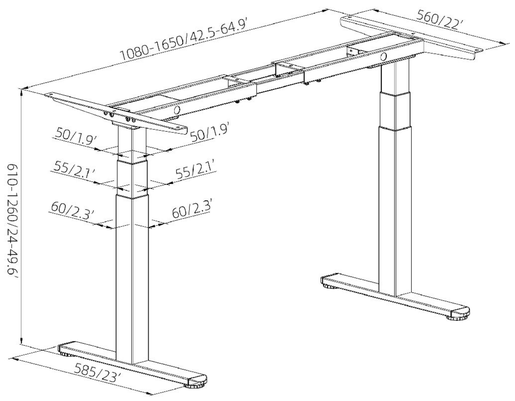

Model No.	JSD2-01-Z
Max. Load Capacity	100KG/220Lbs
Height Range	610-1260mm/24.0-49.6 in
Motion speed	30mm/s
Color	White/Black/Gray
Material	Steel, Plastic