V-MOUNTS

Electric Height Adjustable Desk with Tiltable Desktop

JSD5-01-WD2

Tiltable desktop can be freely adjusted to meet daily needs.

Anti-slip support prevent items from slipping.

3 memorable height preset, convenient height adjustment.

The collision detection function ensures safety of use.

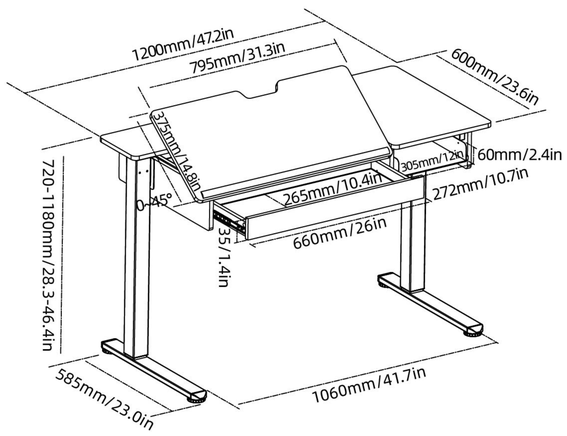

Model No.	JSD5-01-WD2
Max. Load Capacity	70KG/154lbs
Desktop size	1200×600mm/47.2×23.6in
Height Range	720-1180mm/28.3-46.4in
Leg	2 stage, reversed, square
Material	Steel,Plastic,PB,Polyester fiber