V-MOUNTS

Easy to Install&Removable Height Adjustable Motorized TV Stand with Tray Storage

VM-TC009

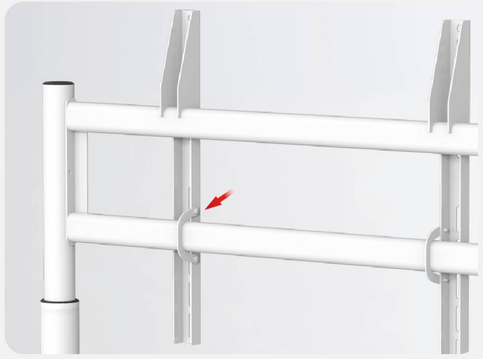

Opening design of the arm, help the screen easy to install

Middle pallet for easy storage.

Height memory mode easy to switch.

Four lockable universal wheels designed to ensure stability.
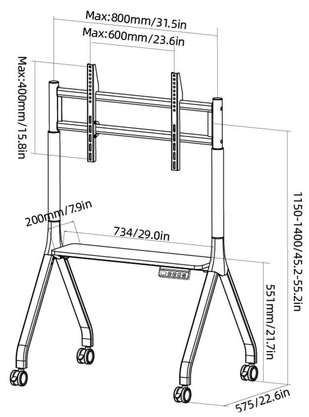
Model No.	VM-TC009
Max. Load Capacity	60kg/132.2lbs for TV, 10kg/22lbs for the center pallet
TV Size	50-100"
Support VESA	Max 600x400
Height Range	1150-1400mm/45.2-55.1in
Material	Steel,PB, Aluminum, Plastic