V-MOUNTS

Multi-scene Use

Electric Height Adjustable Desk

Stretchable Frame

JSD5-02-EU3

Height memory mode can restore the desk height with one click and switch easily.

Stretchable desk frame designed for use in multiple scenarios.

Micro-adjustable foot pads for balanced use.

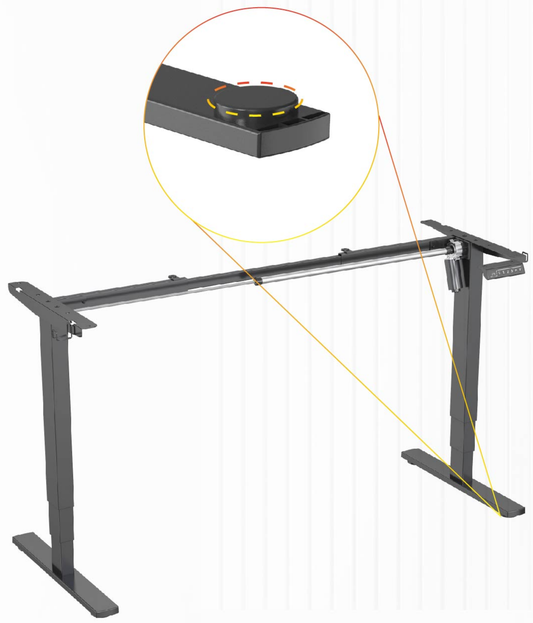

Convenient Storage (Wire Hook).

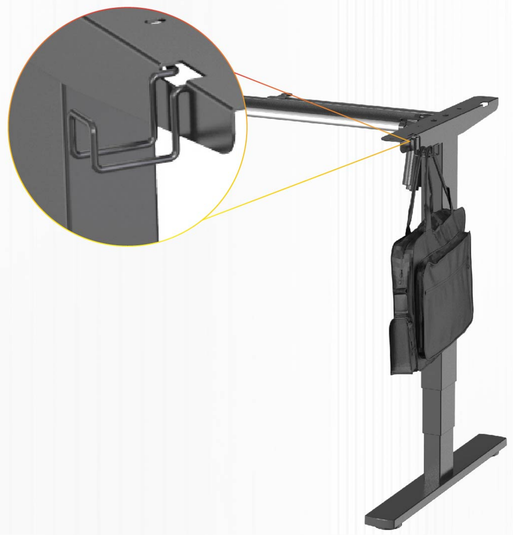

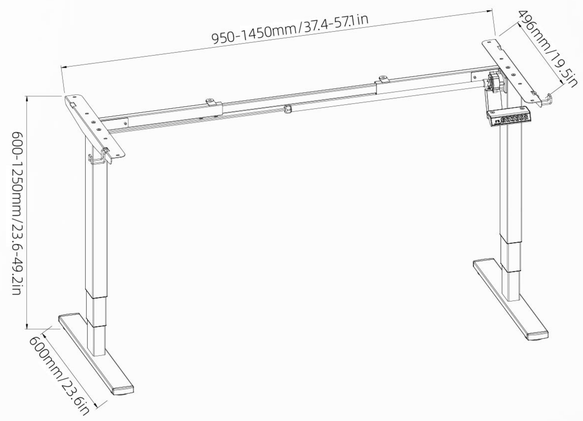

Model No.	JSD5-02-EU3
Max. Load Capacity	80KG/176Lbs
Stretching Range	950-1450mm/37.4-57.1in
Height Range	600-1250mm/23.6-49.2 in
Color	White/Black/Gray
Material	Steel, Plastic