V-MOUNTS

V-mounts

Electric Adjustable Desk with Hidden Drawer

JSD5-01-G7

① Hidden drawers for additional space.

② Comes with 1 USB 2.0 + 1 Type-c charging port.

③ Micro-adjustable height non-slip foot pads.

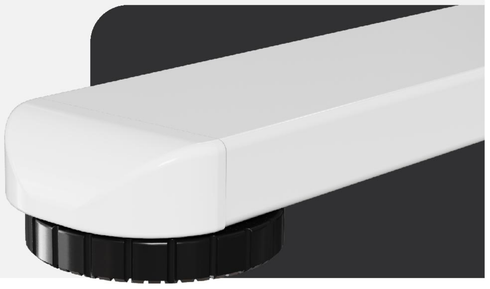

④ Easy-to-clean desk surface.

⑤ Motorized adjustment of table height for use.

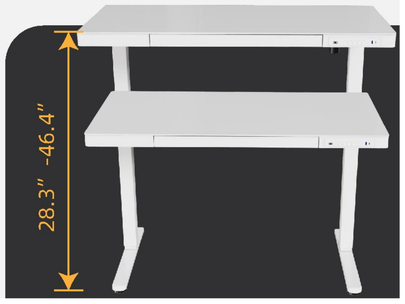

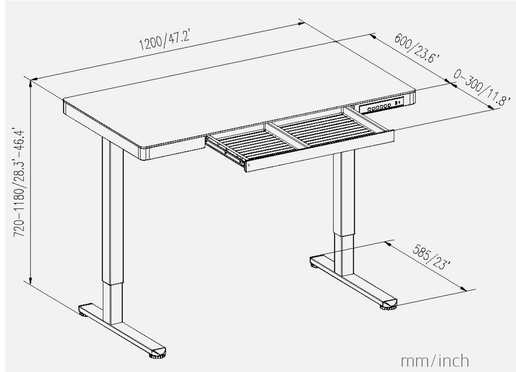

Model No.	JSD5-01-G7
Max. Load capacity	50kgs/110 lbs
Desktop size	1200×600mm/47.2×23.6"
Height range	720-1180mm/28.3-46.4"
Color	Black、White、Silvery grey
Material	Steel、Aluminum、Stalinite、Plastic