V-MOUNTS

Electric Height Adjustable Standing Desk

JSD5-01

Features

Choice available in light grain,white, black and antique wood.

Single motor bears max weight of 154lbs.

Collision detection system.

Programmable height presets and support quick charging.

Typical accessories

Cable organizer
（VM-HED-GW01）

Headset hook
（VM-PJ-A07）

Arm rest
(VM-EH01)

Privacy panel
(VM-FS101)

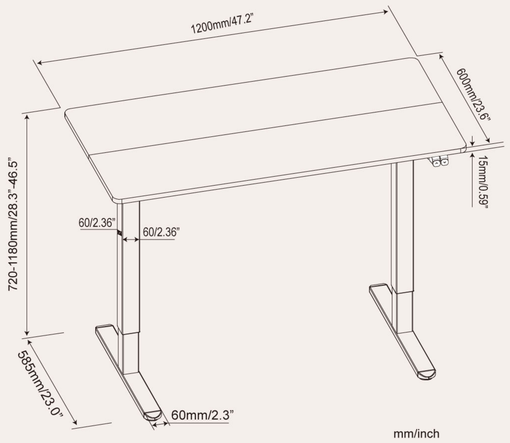

Model No	JSD5-01
Height Range	720-1180mm/28.3~46.5in
Speed	20mm/s 1 in/s
Power Input	110-240V
Motion Noise	< 55dB
Desktop Size	39.4/47.2/55.1/63in x 23.6/27.5in