V-MOUNTS

Electric Standing Desk with Drawers, 55×27 inch Granite Desktop

JSD2-02-M4

Granite Premium Textured Desktop.

Edge baffles for added safety.

Dual drawer design for expanded use of space.

Convenient and fast charging interfaces.

Dual motor stabilized drive height adjustment.

Uniquely shaped and sturdy table legs.

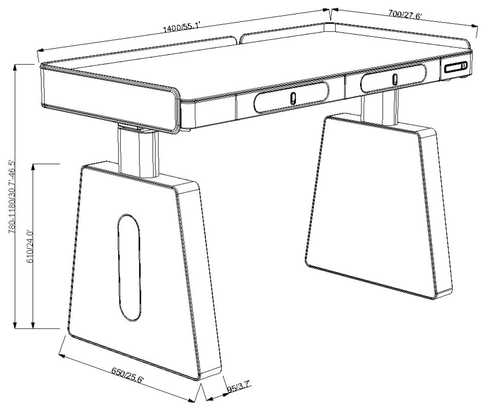

Model No.	JSD2-02-M4
Max. Load capacity	100kgs/220 lbs
Desktop size	1400x700mm/55.1×27.6 in
Height range	780-1180mm/30.7-46.5 in
Interface type	1 USB3.0&1 Type-c
Color	Black,Black walnut
Material	Steel,MDF+Wooden cover,Plastic,Stalinite