V-MOUNTS

Ultra-Slim Flip Mobile Desk with Flexible Design and Hidden Wheels

Flip-Top Design | Desktop Edge Support | I-Beam Base Design | Hidden Wheel Design

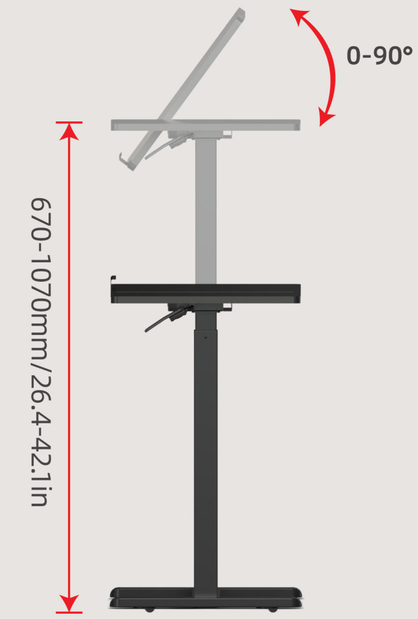

Flip-Top Design
Flexibly adapts to different work needs, enhancing efficiency.

Desktop Edge Support
Prevents items from sliding off, ensuring a clean and safe workspace.

I-Beam Base Design
Provides exceptional stability and support, preventing wobbling and ensuring safe use.

Hidden Wheel Design
Wheels tuck under for easy storage under sofas or beds, keeping the space tidy.
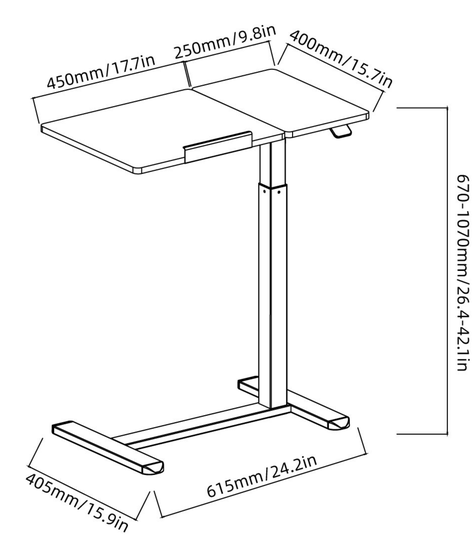
Model No.	VM-FA116
Max. Load Capacity	8kg/17.6lbs
Desktop Size	700x400mm/27.6x15.7in
Height Range	670-1070mm/26.4-42.1in
Base Size	615x405mm/24.2x15.9in
Frame Color	White/Black
Material	Steel,Particle Board,Plastic