V-MOUNTS

V-mounts Mobile Adjustable Desk With Hidden Casters And Folding Base

VM-FDS110

Unique outlook with circular desktop , prevent accidental scratches.

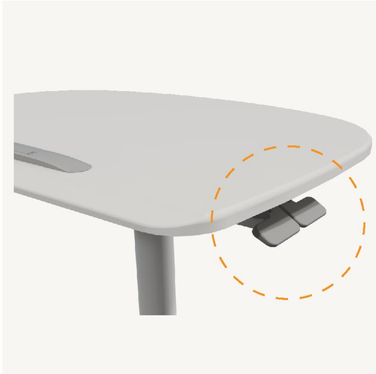

Wider handle switch designed for improving use experience.

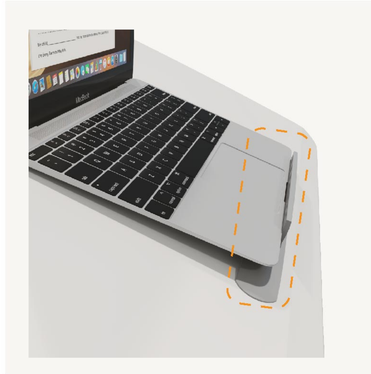

Desktop flip bar prevents items from falling.

Smoothly and stably rise up and down with gas spring adjusted function.

Move easily with hidden casters, put under the sofa with lower base.

Folded and stored without tools, more practical in small family home.

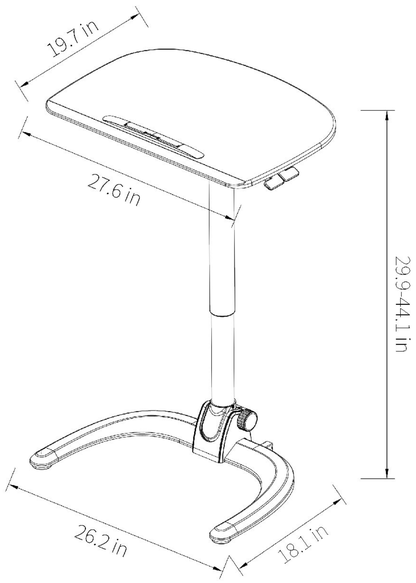

Model No.	VM-FDS110
Color	Black/White/Wooden/ODM
Drive mode	Gas spring
Main material	Steel+Plastic
Max. Load capacity	10kgs/ 22lbs
Desktop size	700x500mm/27.6x19.7 in
Height range	760-1100mm/29.9-43.8 in
Base size	665x460mm/26.2-18.1 in