V-MOUNTS

Basic Configuration Recommends

Single Motor Electric Height Adjustable Desk

JSD5-02-1P

Outstanding load-bearing capacity

Electric height adjustment with ease and simplicity

Two-key control, low-cost implementation of height adjustment.

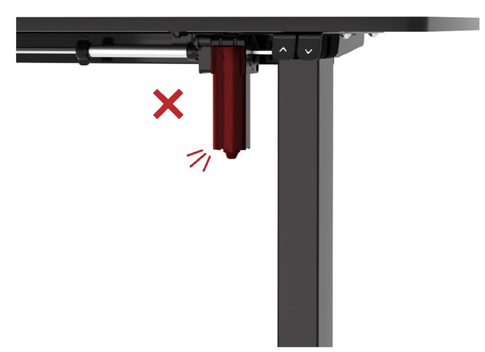

Motor overheating operation protection.

Splash-proof and easy to clean desk surface.

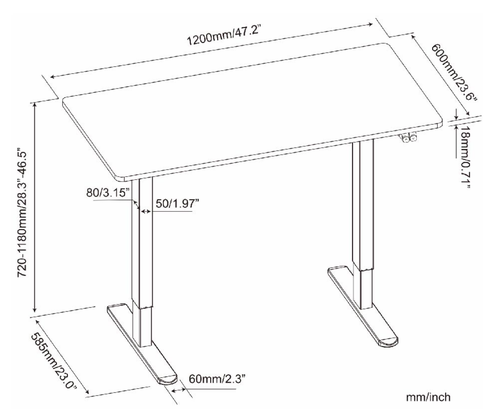

Model No.	JSD5-02-1P
Max. Load Capacity	70KG/154Lbs
Height Range	720-1180mm/28.3-46.5 in
Color	White/Black/Gray
Material	Steel, Particle Board,Plastic