V-MOUNTS

Foot-operated Adjustment
Mobile Laptop Desk

VM-FDS115B

Versatile reversible desktop ideal for various settings.

Anti-slip feature ensures devices stay securely in place.

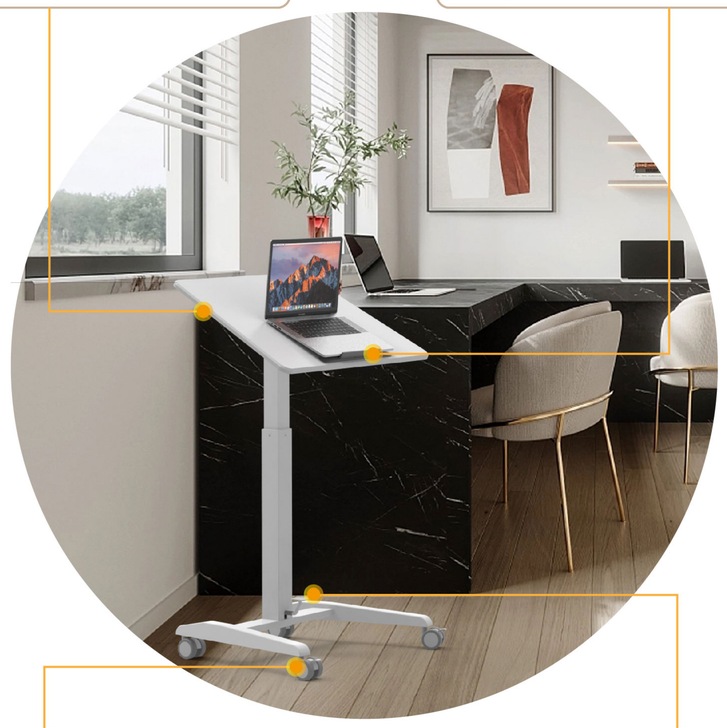

Versatile mobility with swivel wheels.

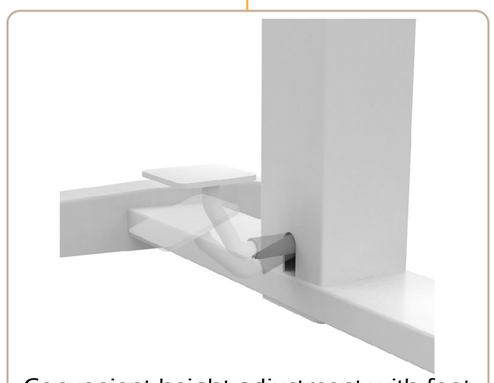

Convenient height adjustment with foot pedal.

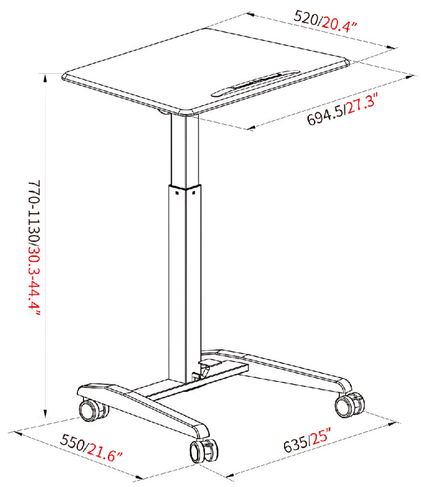

mm/inch

Model No.	VM-FDS115B
Max. Load Capacity	8KG/17.6lbs
Desktop Size	694.5x520mm/27.3x20.4in
Height Range	770-1130mm/30.3-44.4in
Base Size	635x550mm/25.0x21.6in
Product Color	White/Black
Flip angle adjustment	0~90°